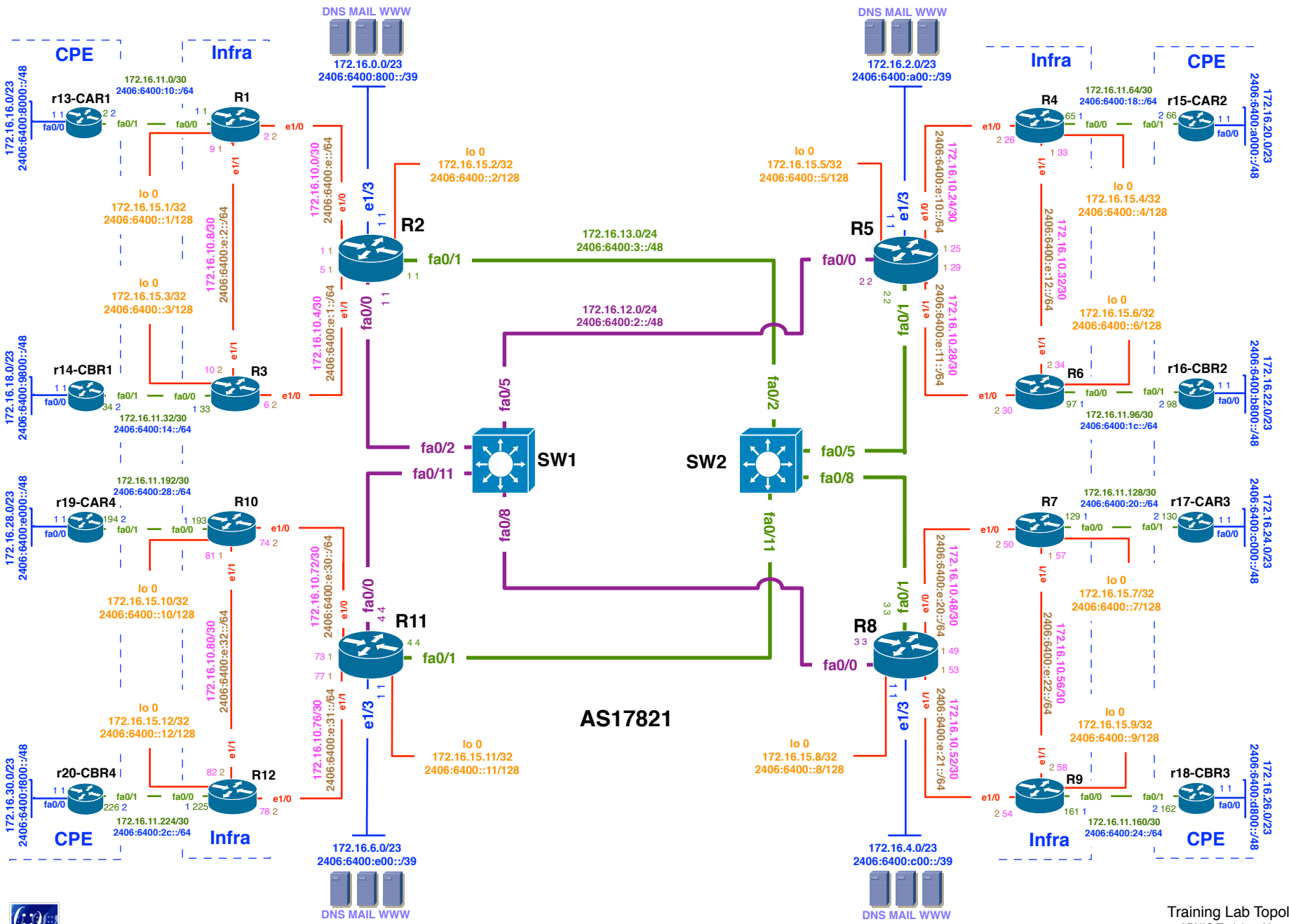

Training Lab Topology

© APNIC Training V4.5

Created: 25/09/2009

Last update: 11/10/2012