Track 2: Operations: Data Center Architectures and Technologies

SANOG 2006 Tutorials: 1st August 2006

Zeeshan Naseh

Asim Khan

Bilal Khawaja

Day Agenda

- **Part I - Data Center Designs and Services (Zeeshan Naseh)**

  Data Center Architectures and Technologies Overview

  Content Switching & Application Optimization

- **Part 2 - L2 Switching Protocols (Bilal Khawaja)**
- **Part 3 - Fiber Channel and Storage Area Networks (Asim Khan)**
- **Part 4 - Data Center Disaster Recovery (Zeeshan Naseh)**

Data Center Designs and Services Agenda

- **Data Centers Components**
- **Data Centers Architectures**
- **Data Centers Technologies**
- **Server Load Balancing (Content Switching)**
- **SSL Offload**
- **Security (Firewall)**
- **Integrated Data Center Services Design Options**

Data Center Components

Acronyms

- ACE Application Control Engine
- BGP Border Gateway Protocol
- Cat4000 Cisco Catalyst® Cat4000
- Cat6500 Cisco Catalyst 6500
- CE Cisco Content Engine
- CSA Cisco Security Agent (Host-based Intrusion Prevention)
- CSM Cisco Content Switching Service Module on Cat6500
- CSS Cisco Content Services Switch (CSS11000 and CSS11500 family)
- FWSM Cisco Firewall Service Module on Cat6500
- HSRP Hot Standby Routing Protocol
- GSS Global Site Selector
- IDSM Cisco Intrusion Detection Service Module on Cat6500
- LMS Cisco Works LAN Management Solution
- MAC Media Access Control
- MSFC Multilayer Switching Feature Card
- NAM Cisco Network Analysis Service Module on Cat6500
- OSPF Open Shortest Path First
- PBR Policy Based Routing
- SLB Server Load Balancing
- SSL Secure Socket Layer
- SSLM Cisco SSL Offload Service Module on Cat6500
- VMS Cisco Works VPN/Security Management Solution
- VPNSM Cisco Virtual Private Network Service Module on Cat6500

Data Center Residents

Presentation Servers

Web front end servers that provides the interface to the clients, e.g., Apache, IIS, etc.

Business Logic Servers

Also known as middleware custom applications

DB Servers

Oracle, Sybase, etc.

Data

Data Center Elements

Application Solution

Linux/HP, Solaris/SunFire, WebLogic, J2EE Custom App, Etc.

Database Solution

Linux/HP, Solaris/ SunFire, Oracle 10G RAC, Etc.

Storage Solution

MDS9000

Data Center Elements

Network Infrastructure Solution

Cisco GSRs, Cisco Catalyst 6500, Cisco Catalyst Cat4000

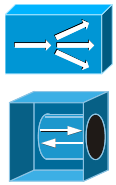

Layers 4–7 Services Solution

ACE, CSM, SSLM, CSS, CE, GSS

Network Security Solution

PIX®, FWSM, IDSM, VPNSM, CSA

Management and Instrumentation Solution

Terminal Servers, NAM, Cisco Works LMS/VMS, HSE

Application Solution

Linux/HP, Solaris/SunFire, WebLogic, J2EE Custom App, Etc.

Database Solution

Linux/HP, Solaris/ SunFire, Oracle 10G RAC, Etc.

Storage Solution

MDS9000

Data Center Elements
Redundancy

Network Infrastructure Solution

GSRs, Cat6500, Cat4000

HSRP, RPR, SSO, RPVST

Layers 4–7 Services Solution

ACE, CSM, SSLM, CSS. CE. GSS

99.999% Availability Desired

State Full Redundancy on CSM and FWSM

Network Security Solution

PIX, FWSM, IDSM, VPNSM, CSA

Application Solution

Linux/HP, Solaris/SunFire, WebLogic, J2EE Custom App, Etc.

Database Solution

Linux/HP, Solaris/ SunFire, Oracle 10G RAC, Etc.

Management and Instrumentation Solution

Terminal Servers, NAM, Cisco Works LMS/VMS, HSE

Storage Solution

MDS9000

Data Center Elements
Scalability

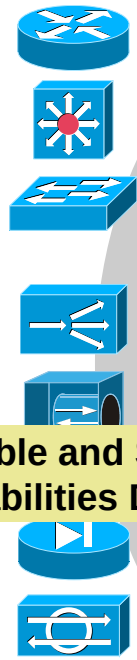

Network Infrastructure Solution

GSRs, Cat6500, Cat4000

Core, Aggregation/Distribution/ Services, Access Model

Layers 4–7 Services Solution

ACE, CSM, SSLM, CSS. CE. GSS

Ability to Scale to Multiple Services Modules (ACE, SSLM, etc.)

Flexible and Simple Growth Capabilities Desired

Network Security Solution

PIX, FWSM, IDSM, VPNSM, CSA

Application Solution

Linux/HP, Solaris/SunFire, WebLogic, J2EE custom app, etc.

Database Solution

Linux/HP, Solaris/ SunFire, Oracle 10G RAC, etc.

Management and Instrumentation Solution

Terminal Servers, NAM, Cisco Works LMS/VMS, HSE

Storage Solution

MDS9000

Data Center Elements
Security

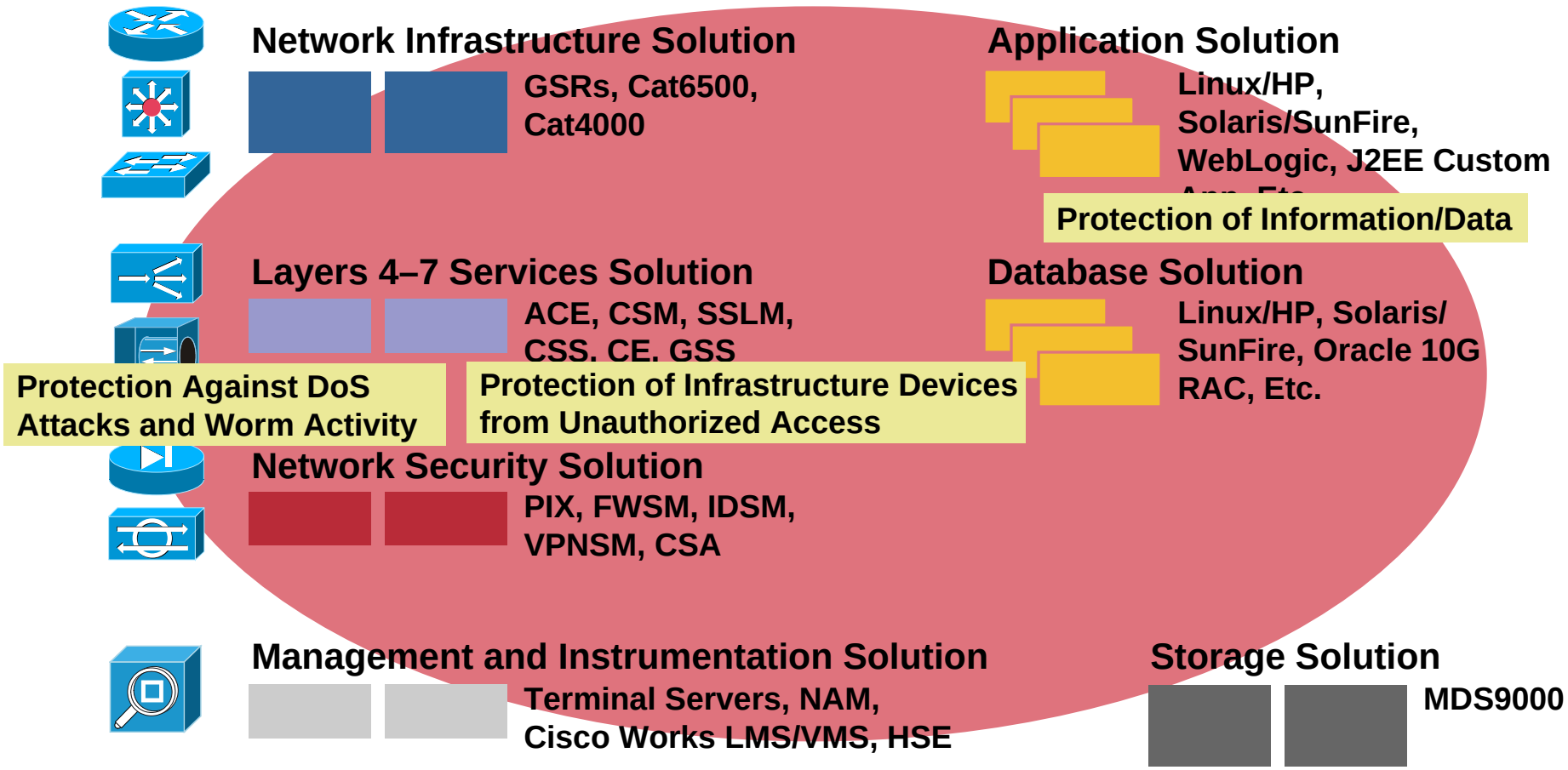

Typical Data Center Topology

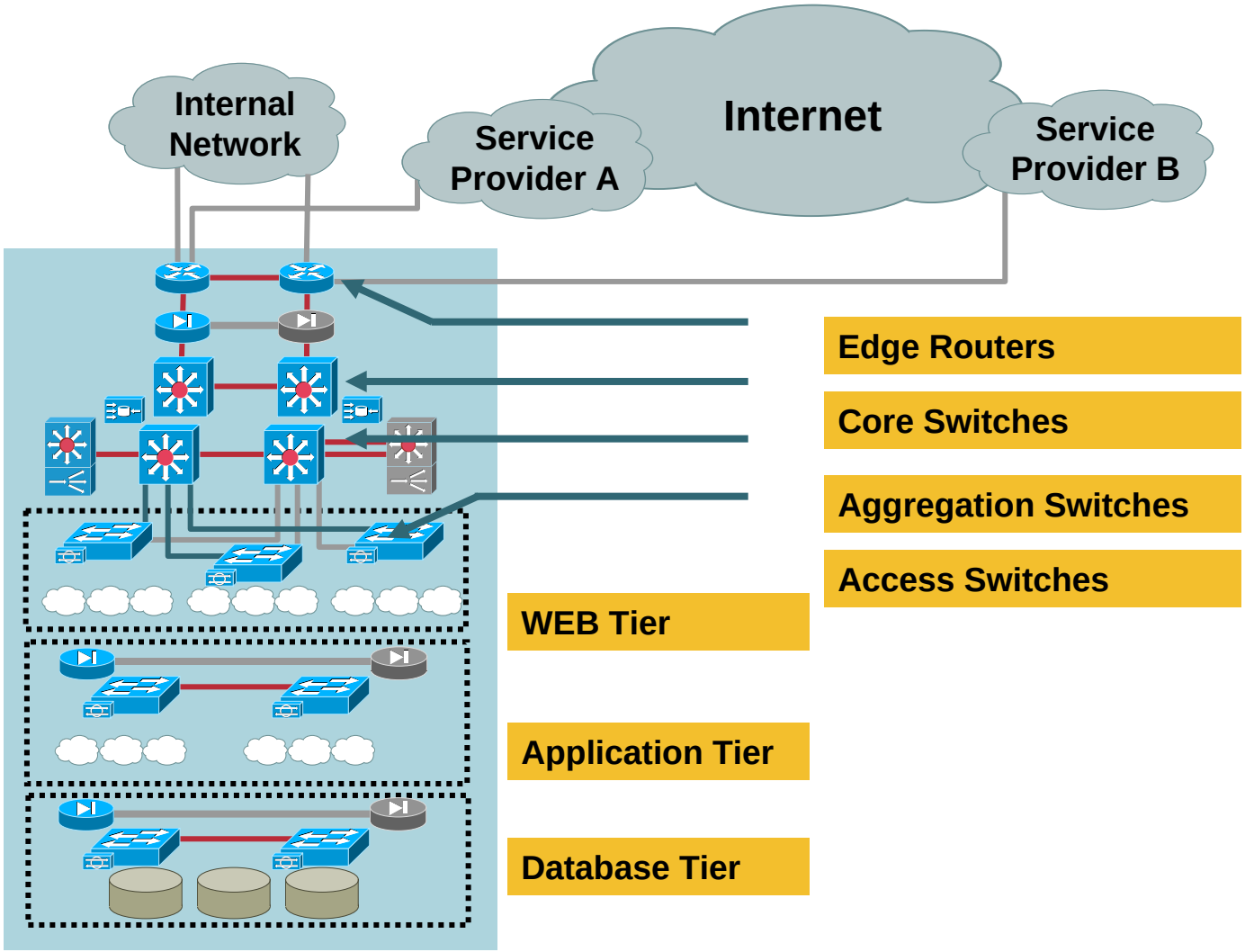

Distributed Data Centers

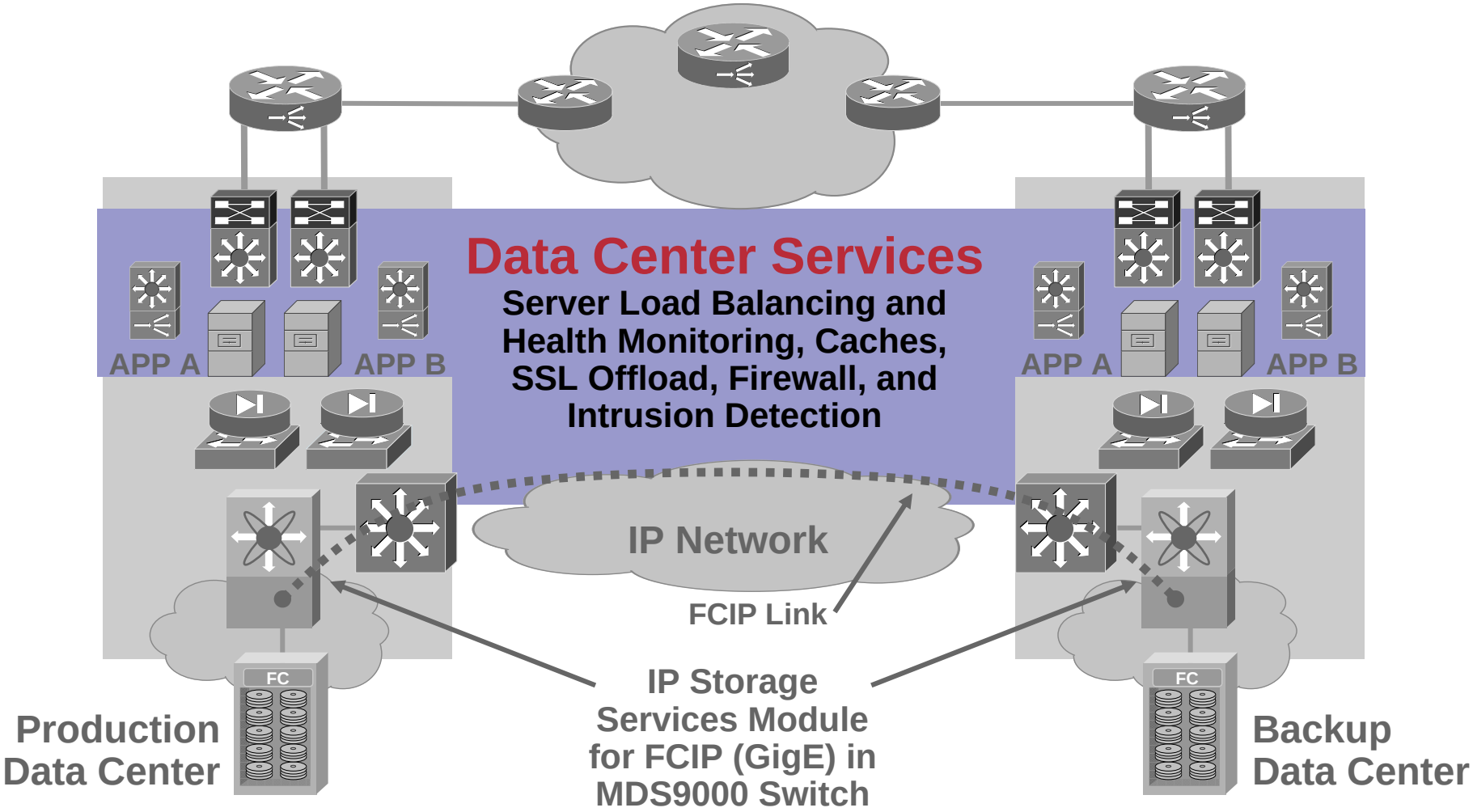

Server Load Balancing

Server Load Balancing

- Also known as content switching; one of the single most important infrastructure service in the data center
- Key purpose being request load distribution; may that be clients coming from internet, intranet, or extranet
- Layers 3 to 7 content switching capabilities are available with extensive keepalives (server health checks) functionality
- Layer 4 or Layer 7 proxy can be used as a security perimeter

Application

Load Distribution

Application Health

Communication of Load to GSLB Device

Content Switching Design Decisions

- Application protocol and ports (listener ports)
- End-to-end application flows
- Direct server access
- Server management
- Server initiated sessions
- Infrastructure design

SLB Overview

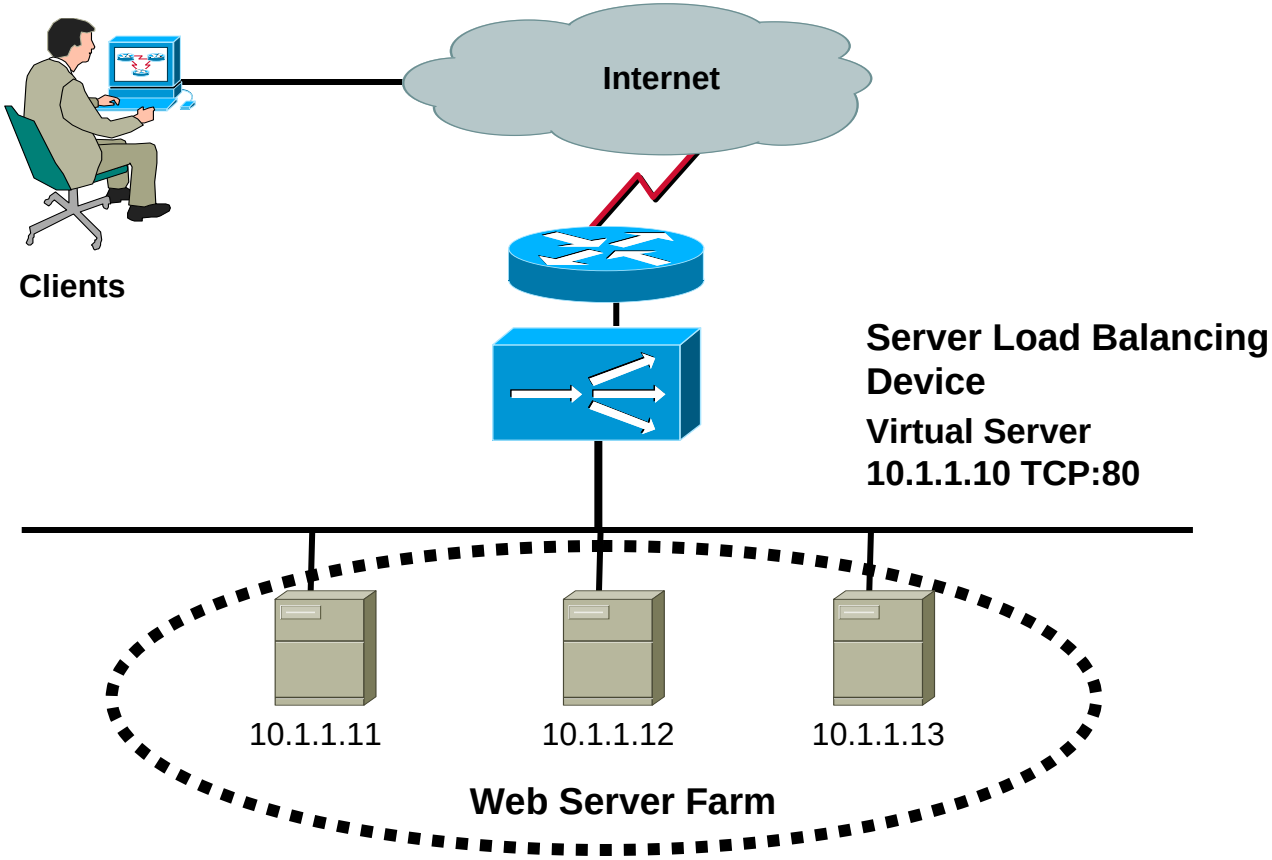

Content Unaware SLB

- Allows the balancing of traffic destined to a virtual server across multiple real servers
- Virtual Server / Content Rule = IP address (VIP) & L4 protocol & port
- Virtual server may have 1 to N real servers
- All real servers within a content rule must have the same content
- In the Simplest case, Load balancing decision is made on:
  - initial SYN for TCP (SYN and flow table miss)
  - initial packet for UDP (flow table miss)
- TCP connection state discarded by conn teardown (FINs/RSTs) or idle timer (garbage collection)
- UDP connection state discarded by idle timer (garbage collection)

Content Aware Loadbalancing

- **Loadbalancing on anything L5 and above (HTTP cookies, HEADER Fields, HTTP Methods, URLs etc)**
- **HTTP URL loadbalancing most popular**
- **Virtual server = IP address & L4 protocol & L4 port & <u>L5-7 info (URL)</u>**
- **Virtual server is chosen by the longest URL match**

Why balance on URLs ?

- **Distributed content**

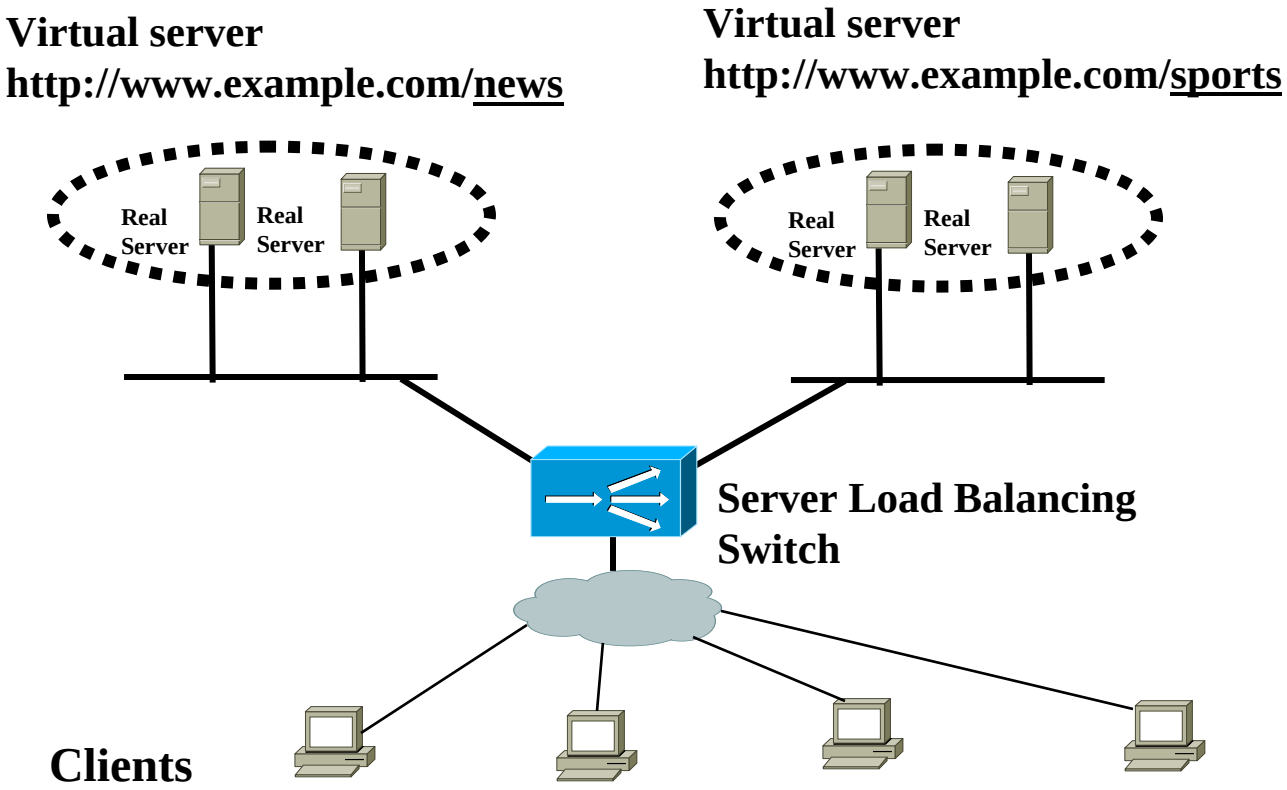

URL Load balancing Packet Flow (HTTP 1.0)

Client requests http://www.example.com/HR/index.html

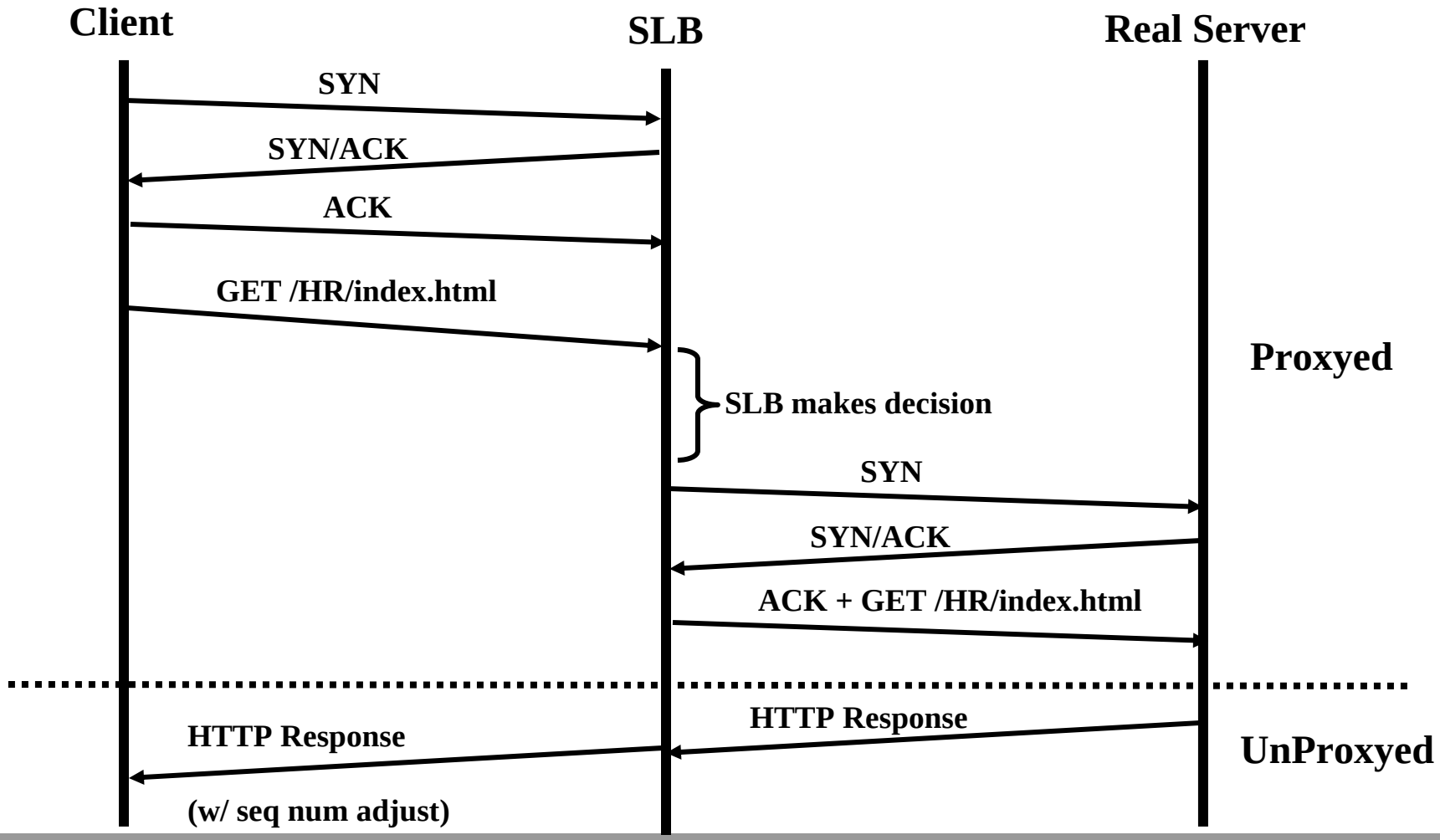

SLB Modes (Packets from SLB Device to Server)

- **2 basic Content Unaware SLB modes**

  Dispatch (VIP not NAT'd)

  - rewrites the MAC address of traffic destined for the virtual server to be the real server MAC address

  Directed (VIP NAT'd to real server IP)

  - rewrites the IP address of traffic destined for the virtual server to be the real server IP address

  - Web servers, APP servers

SLB Modes (Packets from SLB Device to Server)

Dispatch Mode (service type transparent or no nat server)

- Requires the real server to have the virtual server IP address
  - loopback interface or secondary IP address
  - a lot of per server configuration, not very popular with web hosting companies
- Requires the real server to be Layer 2 adjacent to the load balancer
- Packets sourced by the real server will contain the virtual IP address as the source (in response to traffic from the load balancer)
- FWs, Caches, SSL Offloaders etc

Directed Mode (default in most SLB devices)

- Real server can be anywhere (L3 addressable)
- No additional configuration needed per real server
- Packets sourced by the real server will contain its own IP address as the source
- Optional NAT of the server L4 port (port 80 -> 8080)
- More work for the loadbalancer
  - IP address change, IP hdr checksum, TCP checksum

Source (client) NAT

- **Remaps the client's IP address and L4 port to one from the loadbalancer's NAT pool**
- ***Ensures the response packets from the real server traverse the same loadbalancer that handled the request***
- **Loadbalancer must respond to pings, arps, etc. for addresses within the NAT pool**

Typical Load Balanced Session

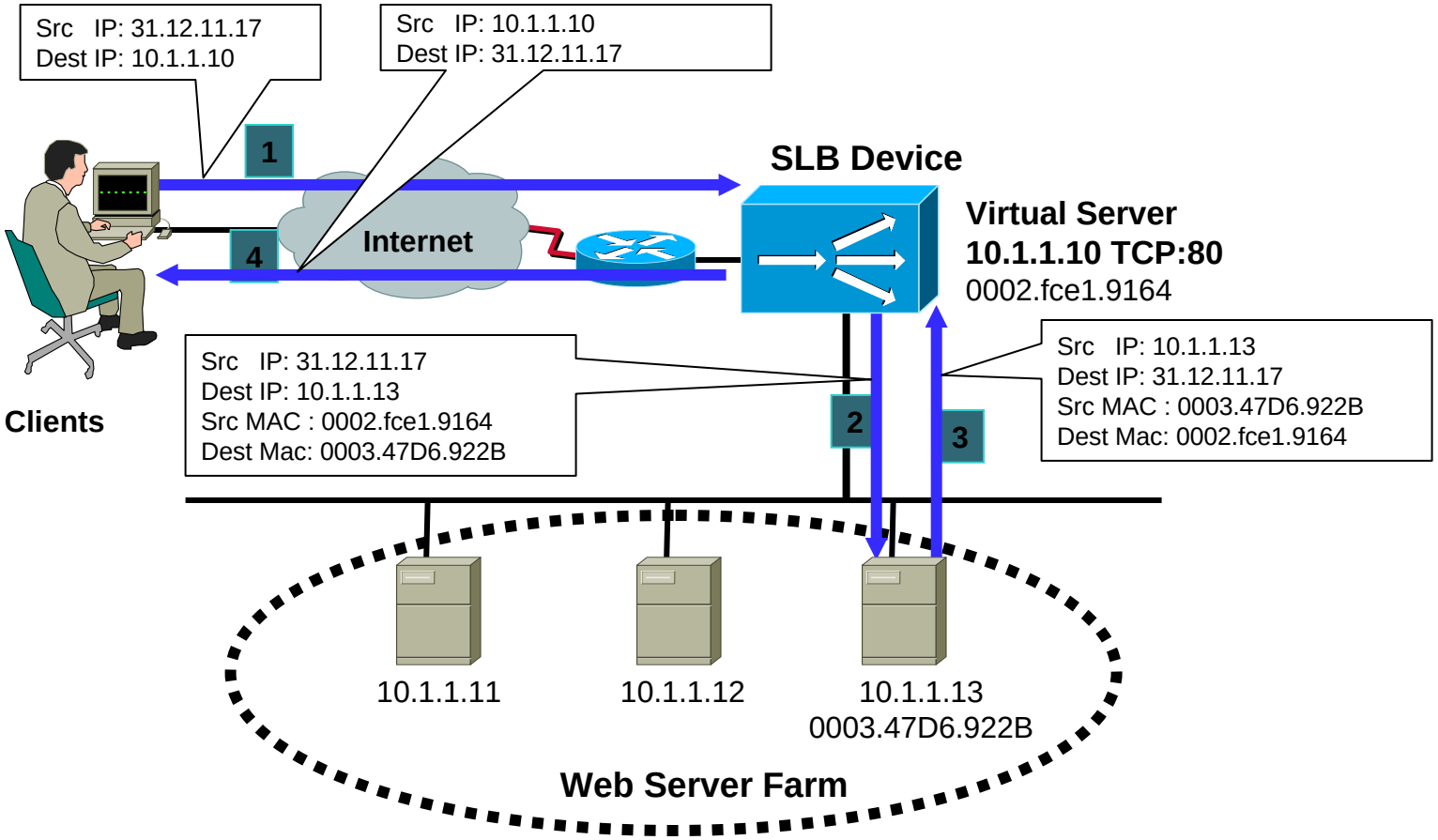

Load Balancing Algorithms

- urlhash
- domainhash
- weightedrr
- leastconn
- url

- domain
- srcip
- destip
- aca
- roundrobin

Weighted Round Robin

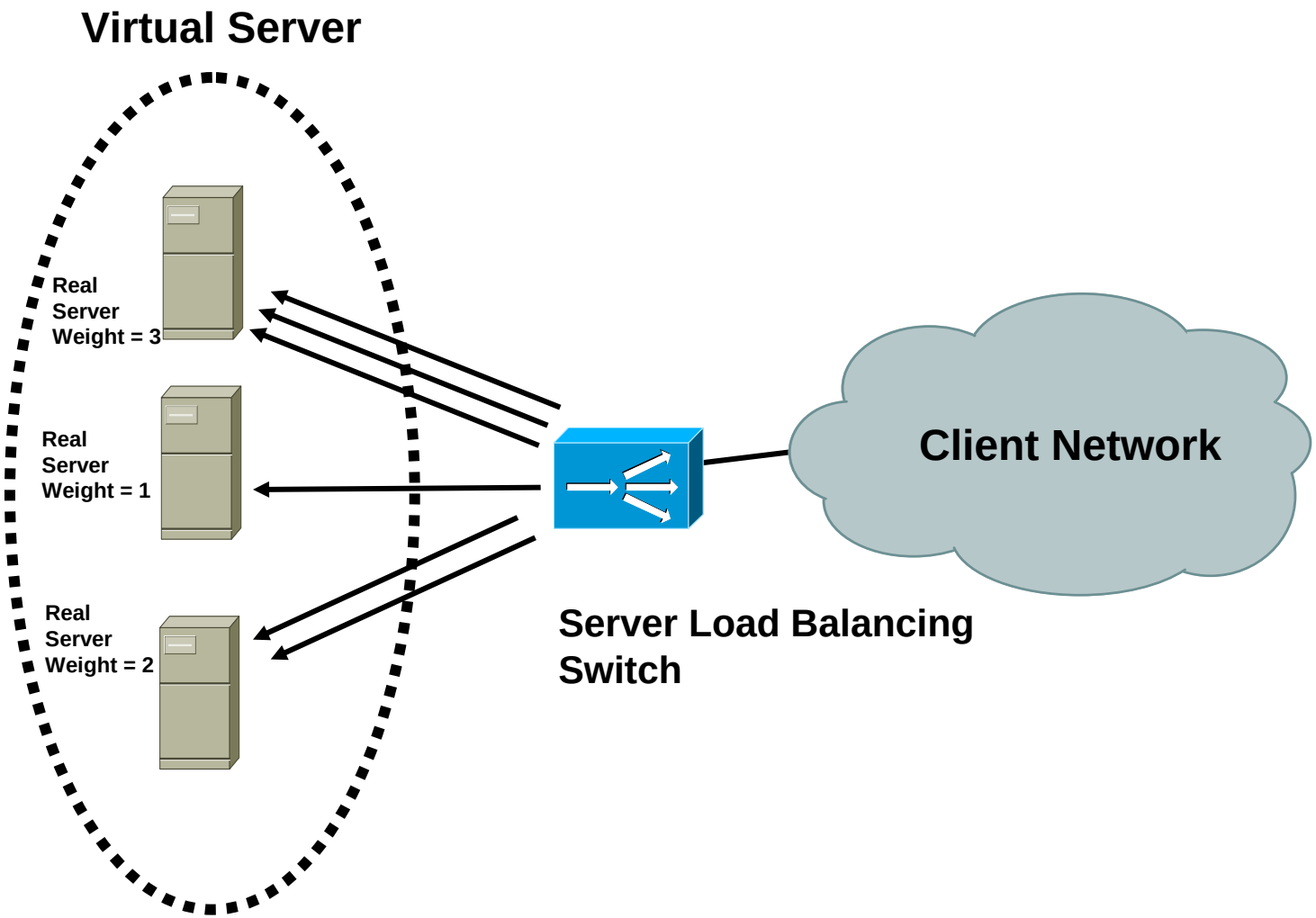

Least Connections

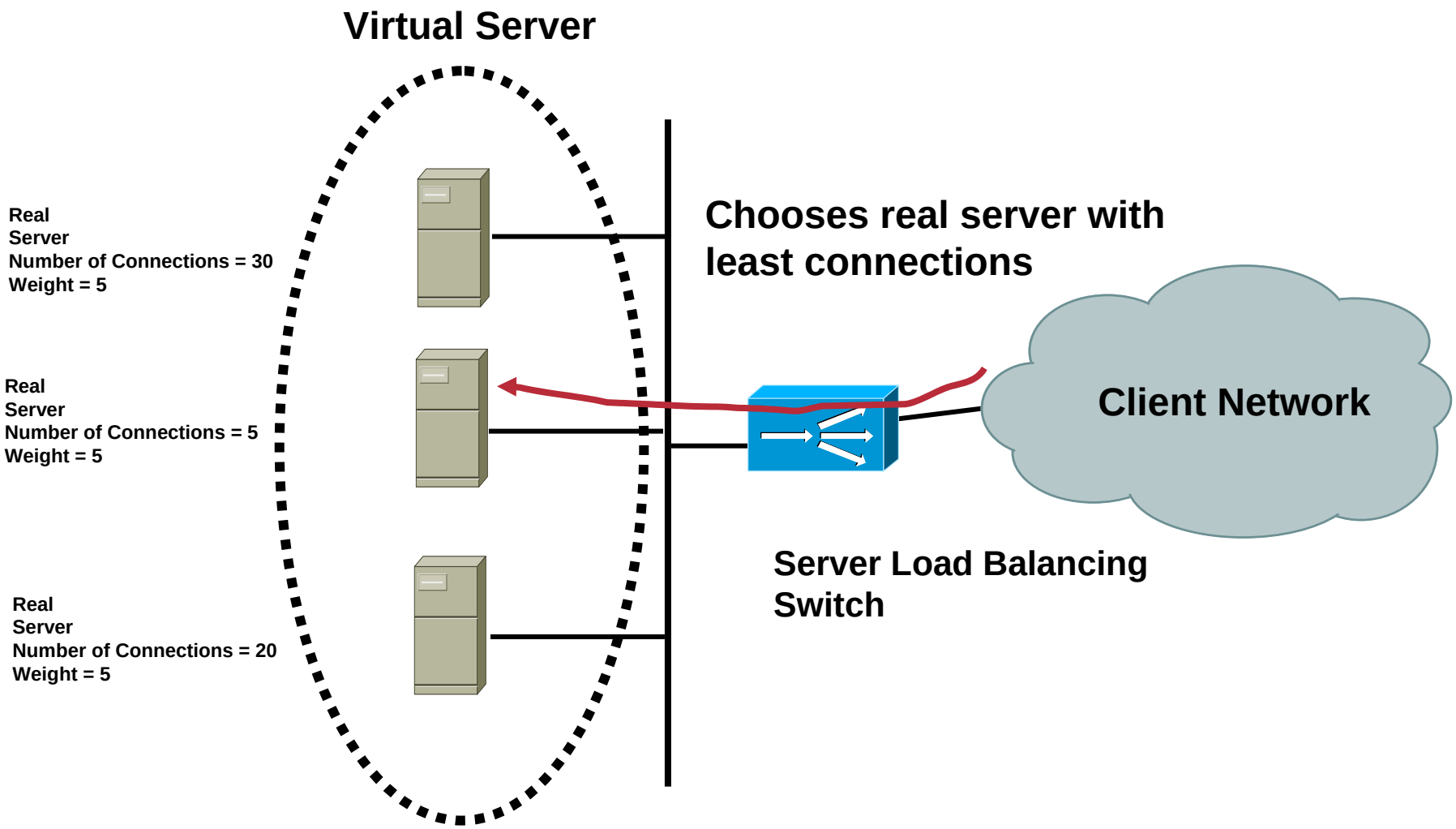

“Sticky” Connections

- Allows new connections from a client to be sent to the same real server as previous connections from that client
- This binding is aged through the use of a sticky timer
- Configured on a virtual server basis
- Could be
  - Source IP based
  - HTTP Cookie based
    - passive (server inserted cookies)
    - active (SLB device inserted cookies)
  - SSL Session ID based

Content Switching Design Approaches
Bridged Mode: Design

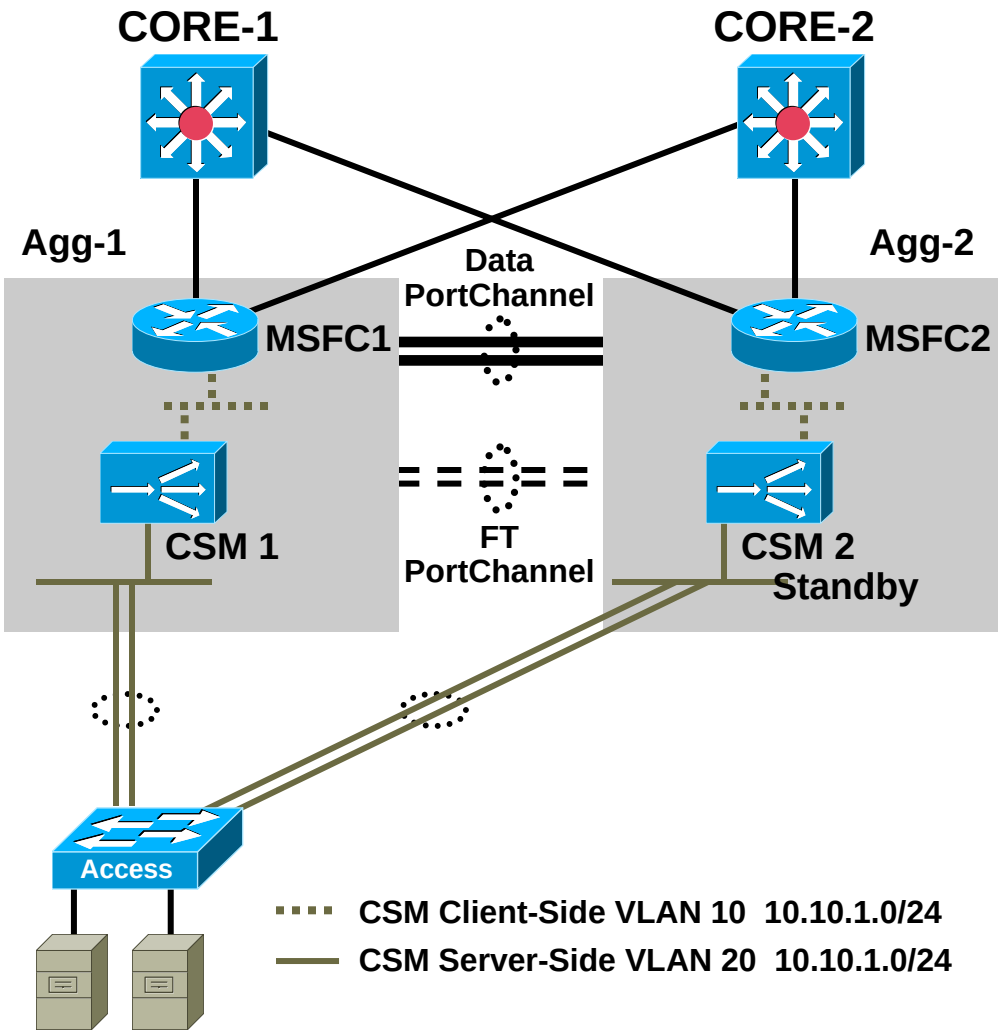

Key Content Switching Design Options

- Bridged mode design
- Routed mode design with MSFC on client side
- Routed mode design with MSFC on server side
- One-armed design

(1) Bridged Mode Design Considerations

- Servers default gateway is the HSRP group IP address on the MSFC
- Broadcast/multicast/route update traffic bridges through
- No extra configurations for:
  - Direct access to servers
  - Server initiated sessions
- RHI possible
- Load balancer inline of all traffic

Content Switching Design Approaches
Bridged Mode: Configuration

CSM

```
module ContentSwitchingModule 4
!
 vlan 10 client
 ip address 10.10.1.5 255.255.255.0
 gateway 10.10.1.1
 alias 10.10.1.4 255.255.255.0
!
 vlan 20 server
 ip address 10.10.1.5 255.255.255.0
!
```

MSFC

```
!
interface Vlan10
 ip address 10.10.1.2 255.255.255.0
 standby 10 ip 10.10.1.1
 standby 10 priority 110
 standby 10 preempt
!
```

ACE

```
interface vlan 10
 bridge-group 10
 access-group input anyone
 access-group output anyone
 no shutdown
!
interface vlan 20
 bridge-group 10
 access-group input anyone
 access-group output anyone
 no shutdown
!
interface bvi 10
 ip address 10.10.1.5 255.255.255.0
 alias 10.10.1.4 255.255.255.0
 peer ip address 10.10.1.6 255.255.255.0
 no shutdown
!
ip route 0.0.0.0 0.0.0.0 10.10.1.1
!
```

Content Switching Design Approaches
Routed Mode: Design

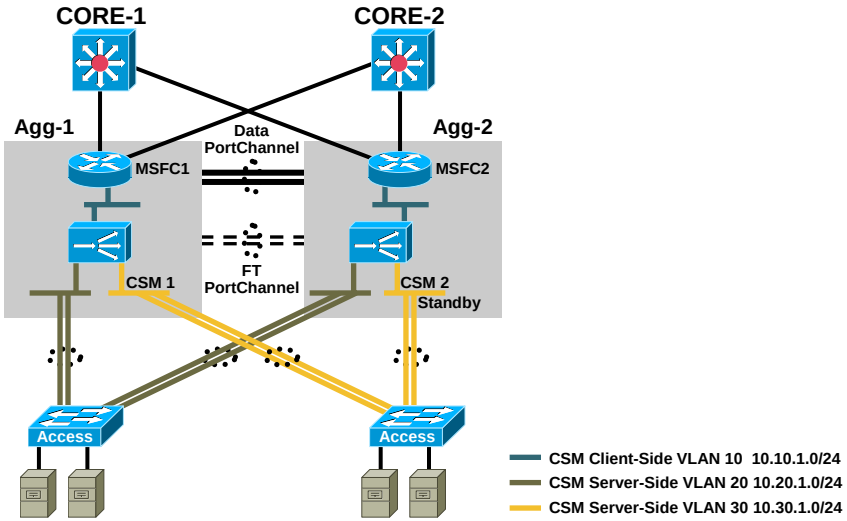

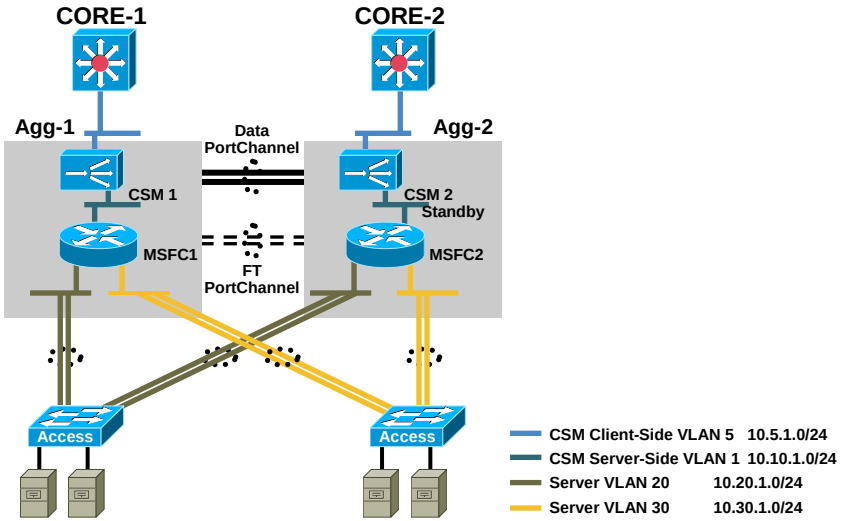

(2A) Routed Mode Design with MSFC on Client Side

- Servers default gateway is the alias IP on the CSM/ACE
- Extra configurations needed for:
  - Direct access to servers
  - Non-load balanced server initiated sessions
- CSM/ACE's default gateway is the HSRP group IP address on the MSFC
- RHI possible
- Load balancer inline of all traffic

(2B) Routed Mode Design with MSFC on Server Side

- Servers default gateway is the HSRP group IP address on the MSFC
- Extra configurations needed for (simpler the option 2a):
  - Direct access to servers
  - Non-load balanced server initiated sessions
- SM's default gateway is the core router
- RHI not possible
- Server to server communication bypasses the load balancer

Content Switching Design Approaches
Routed Mode: Configuration

CSM

```
module ContentSwitchingModule 4
!
 vlan 10 client
 ip address 10.10.1.5 255.255.255.0
 gateway 10.10.1.1
 alias 10.10.1.4 255.255.255.0
!
 vlan 20 server
 ip address 10.20.1.2 255.255.255.0
 alias 10.20.1.1 255.255.255.0
!
 vlan 30 server
 ip address 10.30.1.2 255.255.255.0
 alias 10.30.1.1 255.255.255.0
!
```

MSFC

```
!
interface Vlan10
 ip address 10.10.1.2 255.255.255.0
 standby 10 ip 10.10.1.1
 standby 10 priority 110
 standby 10 preempt
!
```

ACE

```
!
interface vlan 10
 ip address 10.10.1.5 255.255.255.0
 alias 10.10.1.4 255.255.255.0
 peer ip address 10.10.1.6 255.255.255.0
 no shutdown
!
interface vlan 20
 ip address 10.20.1.2 255.255.255.0
 alias 10.20.1.1 255.255.255.0
 peer ip address 10.20.1.3 255.255.255.0
 no shutdown
!
interface vlan 30
 ip address 10.30.1.2 255.255.255.0
 alias 10.30.1.1 255.255.255.0
 peer ip address 10.30.1.3 255.255.255.0
 no shutdown
!
ip route 0.0.0.0 0.0.0.0 10.10.1.1
```

Content Switching Design Approaches
One-Armed Mode: Design

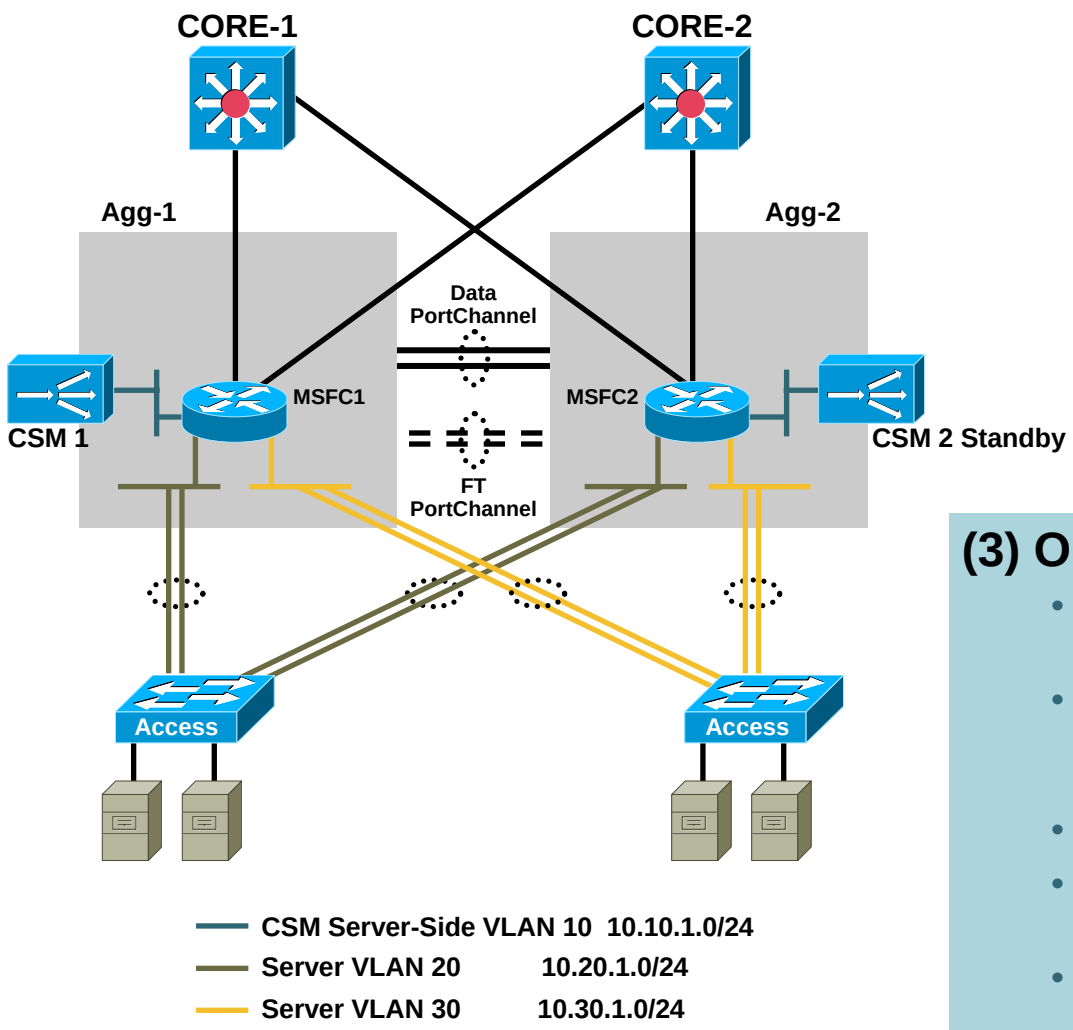

(3) One-Armed Design Considerations

- Servers default gateway is the HSRP group IP address on the MSFC
- No extra configurations for:
  - Direct access to servers
  - Server initiated sessions
- RHI possible
- CSM/ACE inline for only server load balanced traffic
- Policy based routing or source NAT can be used for server return traffic redirection to the load balancer

Content Switching Design Approaches
One-Armed Mode: PBR Configuration

MSFC

```
!
interface Vlan10
 ip address 10.1(
 standby 10 ip 1(
 standby 10 prio
 standby 10 pree
!
```

MSFC

```
!
interface Vlan20
 ip address 10.20.1.2 255.255.255.0
 ip policy route-map FromServersToSLB
 standby 20 ip 10.20.1.1
 standby 20 priority 110
 standby 20 preempt
!
access-list 121 permit tcp any eq telnet any
access-list 121 permit tcp any eq www any
access-list 121 permit tcp any eq 443 any
access-list 121 deny  ip any any
!
route-map FromServersToSLB permit 10
 match ip address 121
 set ip next-hop 10.10.1.4
```

CSM - Asymmetric Routing

```
!
module ContentSwitchingModule 4
 variable ROUTE_UNKNOWN_FLOW_PKTS 2
!
```

ACE - Asymmetric Routing

```
!
!
interface vlan 10
 ip address 10.10.1.5 255.255.255.0
 alias 10.10.1.4 255.255.255.0
 peer ip address 10.10.1.6 255.255.255.0
 no normalization
 access-group input anyone
 access-group output anyone
 no shutdown
!
```

Content Switching Design Approaches
One-Armed Mode: Source-NAT Configuration

CSM

```
!
module ContentSwitchingModule 4
!
 natpool SRC_NAT 10.10.1.110 10.10.1.110 netmask
    255.255.255.0
!
!
 serverfarm SFARM_NAT
 nat server
 nat client SRC_NAT
 real 10.20.1.11
  inservice
 real 10.20.1.12
  inservice
 probe TCP
!
```

ACE

```
!
policy-map multi-match SLB-TELNET-POLICY
 class SLB-TELNET
  loadbalance vip inservice
  loadbalance policy TELNET-POLICY-TYPE
  loadbalance vip icmp-reply
  nat dynamic 1 vlan 10
!
interface vlan 10
 ip address 10.10.1.6 255.255.255.0
 alias 10.10.1.4 255.255.255.0
 peer ip address 10.10.1.5 255.255.255.0
 no normalization
 access-group input anyone
 access-group output anyone
 nat-pool 1 10.10.1.110 10.10.1.110 netmask
    255.255.255.0 pat
 no shutdown
!
```

Content Switching Design Approaches
Virtual Context in ACE

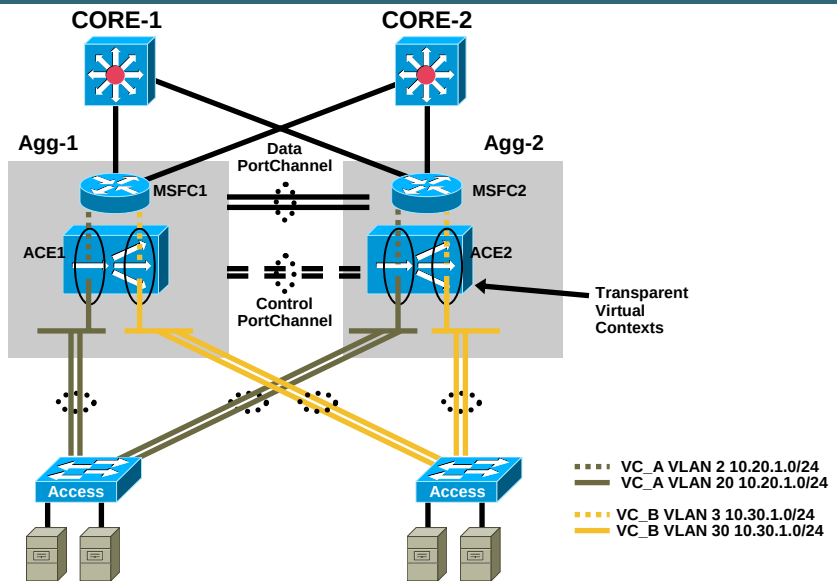

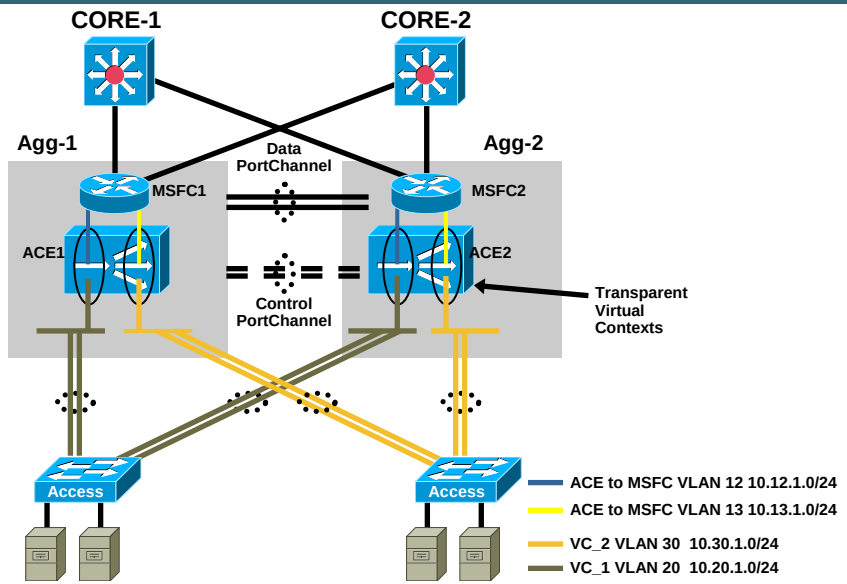

(4A) Bridged Context

```
context VC_A
 allocate-interface vlan 2
 allocate-interface vlan 20
 member VC_A_RESRC
!
context VC_B
 allocate-interface vlan 3
 allocate-interface vlan 30
 member VC_B_RESRC
```

(4B) Routed Context

```
context VC_1
 allocate-interface vlan 12
 allocate-interface vlan 20
 member VC_1_RESRC
!
context VC_2
 allocate-interface vlan 13
 allocate-interface vlan 30
 member VC_2_RESRC
```

SSL Offload

Network-Based SSL Offload

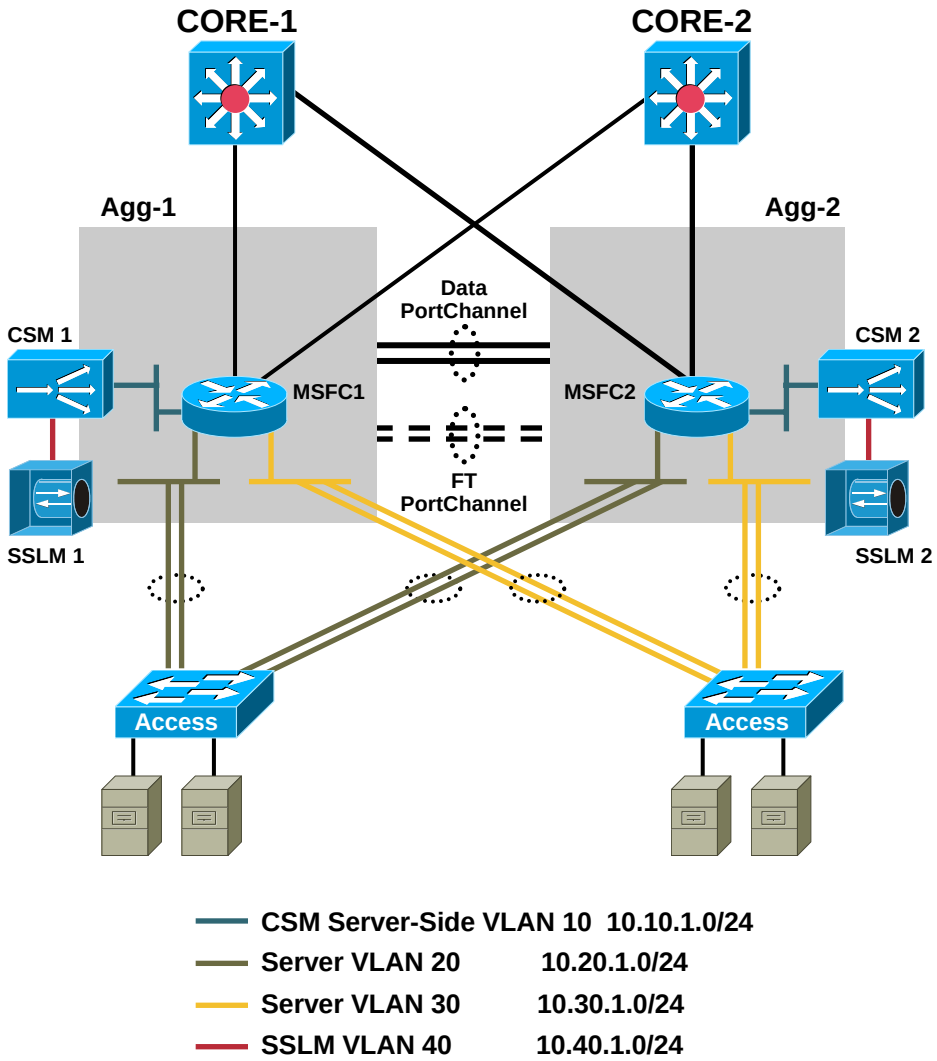

Key Motivations

- Offload SSLdecryption/ encryption from servers
- Redundancy
- Scalability
- Unified management of SSL certificates
- Layer 7 based load balancing and sticky possible for HTTPS

SSL Offload Design

- Simply add the SSLMs on a VLAN connected to the ACE
- SSLMs default gateway would be the alias IP on the ACE
- Backend SSL requires no design change

SSL Services Module
Configuration Tips: Admin VLAN and Data VLAN

One VLAN on the SSL Module Has to Be "Admin VLAN"

Make Sure That the Admin VLAN Has a Route to the CA, TFTP Server, Management Stations, Etc.

The "Admin VLAN" Can Also Carry Data Traffic

The Default Gateway of the Admin VLAN Is the Module Default Gateway

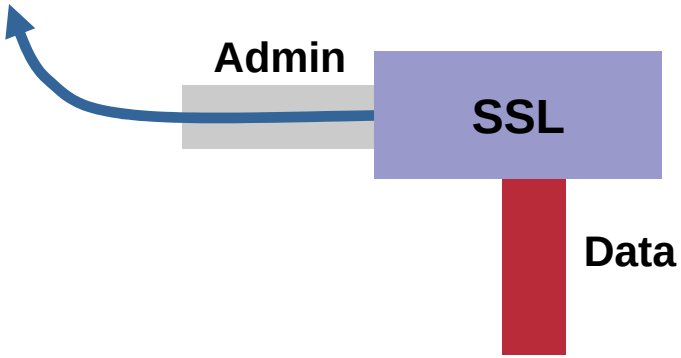

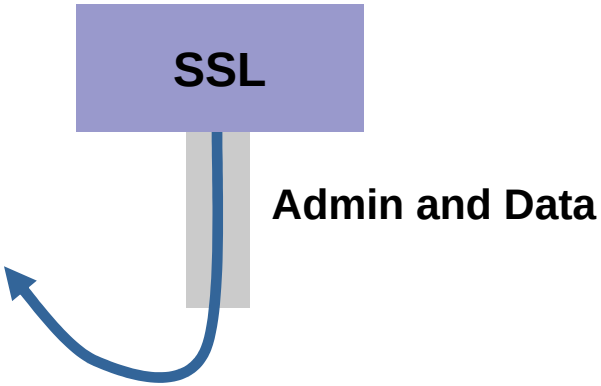

Network Based SSL Offload
Intrusion Detection Benefits

- If SSL offloading uses backend encryption
- More accurate Layer 5 load balancing decisions
- Is there any security advantage?
- Yes—you can monitor the decrypted traffic with an IDS sensor

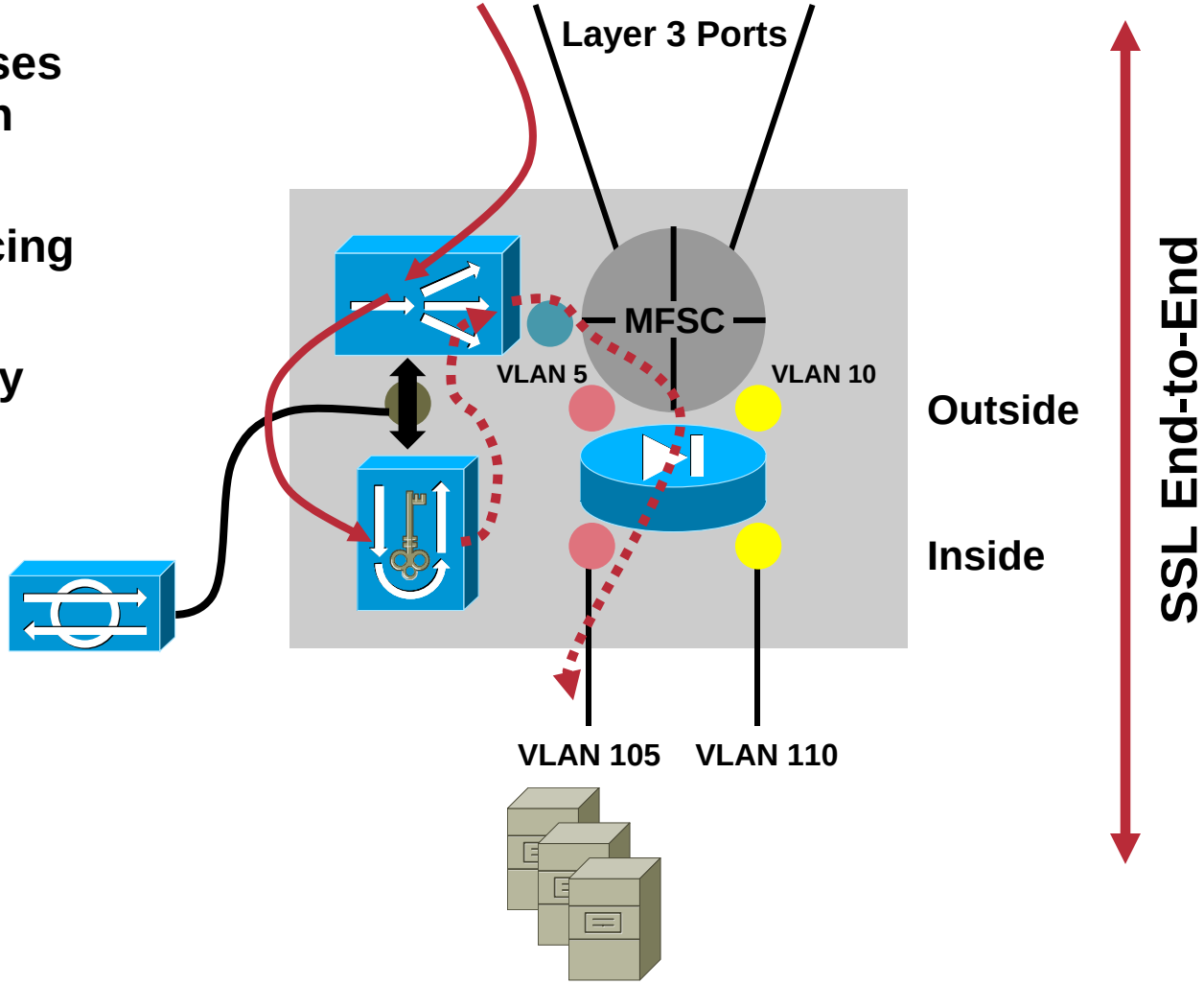

Data Center Security

Firewall Design Approaches
Layer 2

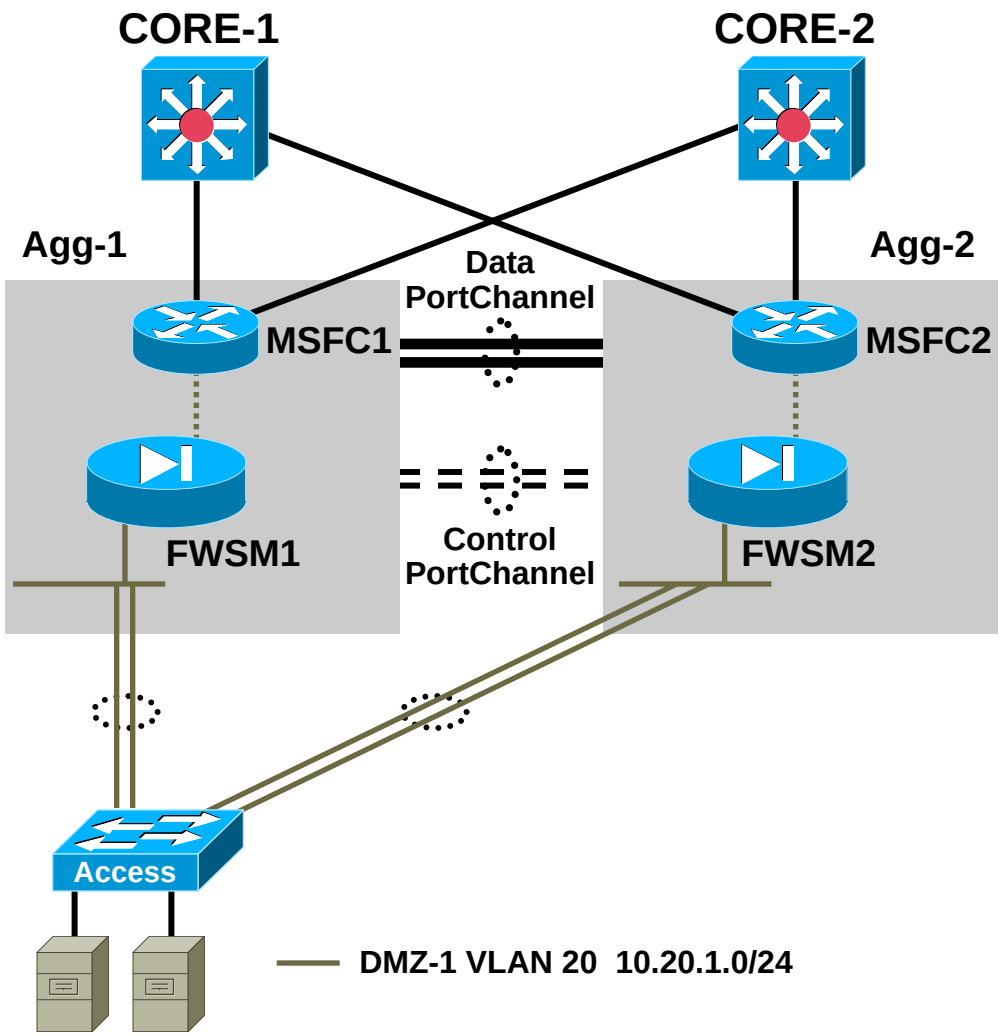

Key Firewall Design Options

- Bridged mode design, also known as transparent or stealth firewall
- Routed mode design, also known as Layer 3 firewall
- Virtual firewall contexts for Layer 2 or Layer 3 mode

(1) Layer 2 (Transparent) Firewall Design Considerations

- Servers default gateway is the HSRP group IP address on the MSFC
- Broadcast/multicast/route update traffic bridges through
- Bump on the wire; easy integration
- Currently two VLANs can be merged

Firewall Design Approaches
Layer 3

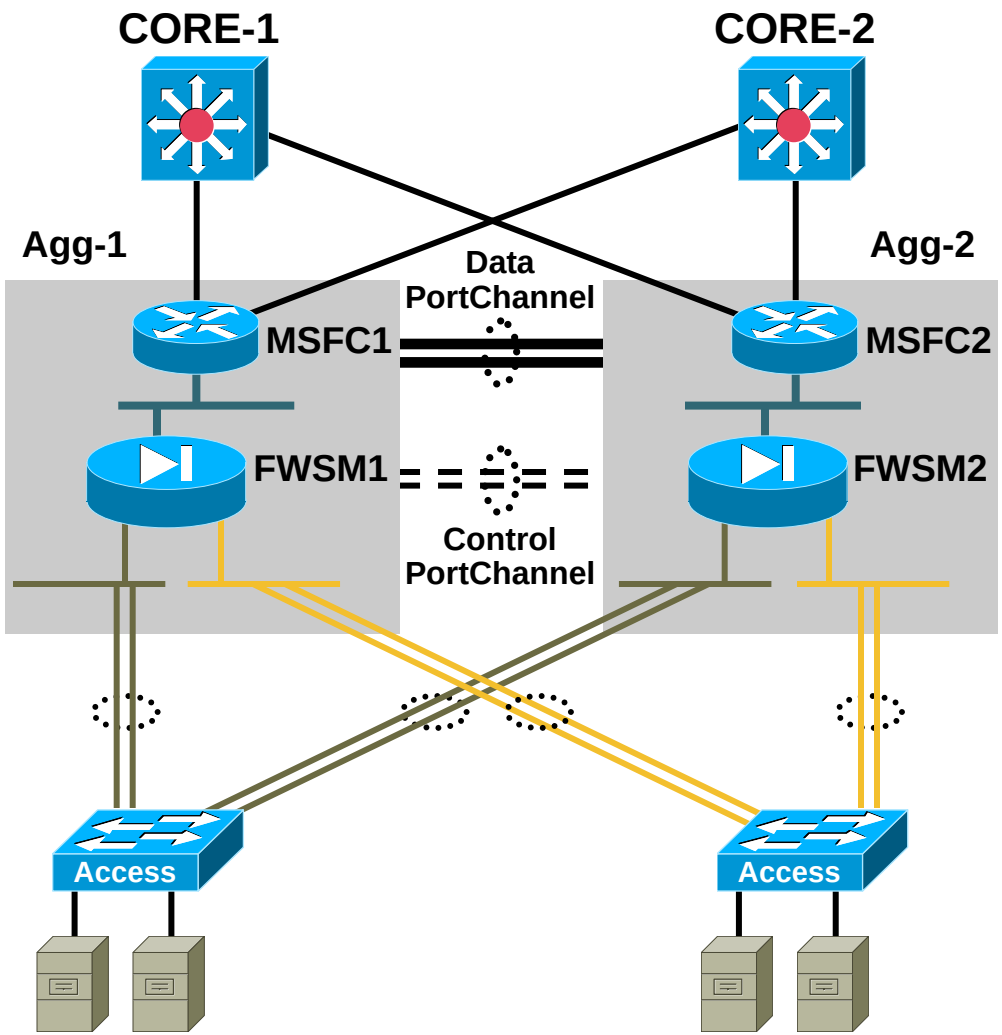

(2) Layer 3 Firewall Design Considerations

- Servers default gateway is the IP address on the firewall
- Dynamic routing is supported

FWSM to MSFC VLAN 10	10.10.1.0/24
DMZ-1 VLAN 20	10.20.1.0/24
DMZ-1 VLAN 30	10.30.1.0/24

Firewall Design Approaches
Virtual Context

- It's the ability to segment a single physical firewall into multiple virtualized instances
- Multiple interfaces/ VLANs within Layer 3 virtual contexts are supported
- Multiple bridge pairs for Layer 2 virtual contexts are supported

ON MSFC

```
firewall multiple-vlan-interfaces
firewall module 7 vlan-group 100
firewall vlan-group 100 21-25,50-53
```

ON FIREWALL

```
CAT1-FWSM-SYS# conf t
CAT1-FWSM-SYS(config)# firewall ?
```

Usage: [no | clear | show] firewall [transparent]

```
FWSM(config)#
FWSM(config)# mode ?
```

Usage: mode single | multiple

```
FWSM(config)#
FWSM#
```

Firewall Design Approaches
Virtual Context

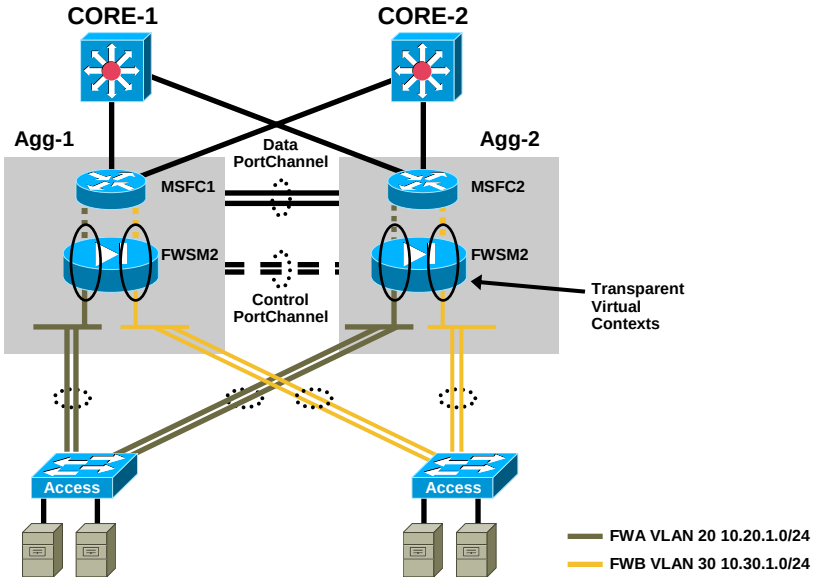

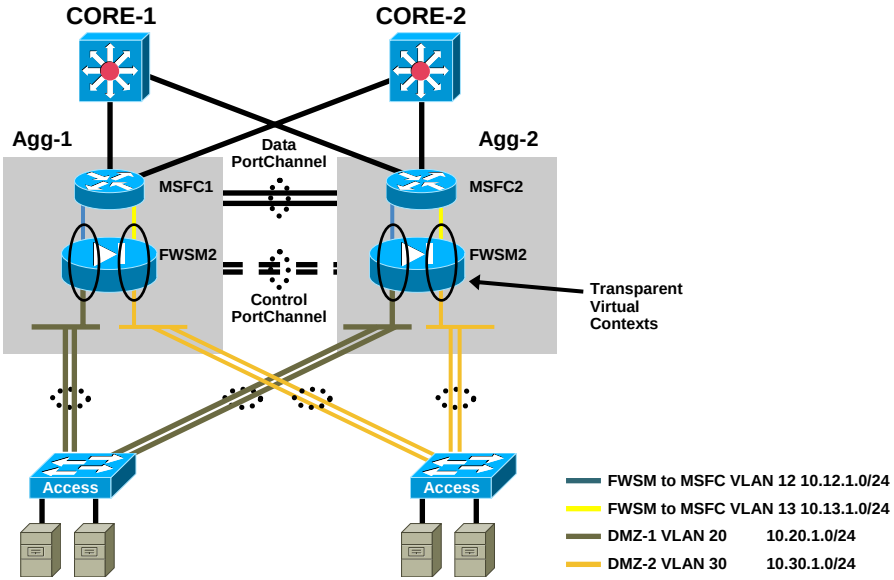

(3A) Transparent Context

```
context FWA
 allocate-interface vlan2
 allocate-interface vlan20
 config-url disk:/FWA.cfg
!
context FWB
 allocate-interface vlan3
 allocate-interface vlan30
 config-url disk:/FWB.cfg
```

(3B) Routed Context

```
context FW1
 allocate-interface vlan12
 allocate-interface vlan20
 config-url disk:/FW1.cfg
!
context FW2
 allocate-interface vlan13
 allocate-interface vlan30
 config-url disk:/FW2.cfg
```

Firewall Services Module (Cont.)
Configuration Tips for Getting Started

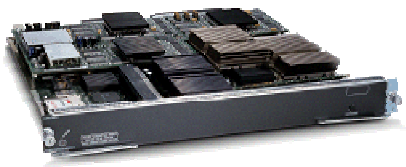

FWSM

Some Initial Configuration FWSM Configuration Statements

```
FWSM# wr t
Building configuration...
: Saved
:
FWSM Version 3.1(1)
<snip>
!
interface Vlan200
 nameif inside
 security-level 100
 ip address 10.130.1.12 255.255.255.0
!
<snip>
icmp permit any inside
<snip>
http server enable
http 192.168.1.0 255.255.255.0 inside
<snip>
telnet 192.168.1.0 255.255.255.0 inside
```

Define VLAN Interfaces and Associate Security Levels

Use This Statement for Each Interface That You Want to Respond to Pings—Without It No Pings Will Be Answered

If You Want to Use PDM to Configure the FWSM, Then You Need to Enable HTTP and Specify the IP Address of Each User Requiring Access

If You Want to Use Telnet to the FWSM Through a FWSM Interface, Then You Need to Define a Telnet Statement for Each User Requiring Access

Integrated Data Center Design Options

Data Center Services Design Options

- **We understand what products and devices are available in the data center to provide the services of security, server load balancing, SSL offload, IPS, etc.**
- **We understand design options of individual products**
- **Let's look at different ways of integrating these products**
- **Each design consists of three redundant layers—core, aggregation, and access**

(1) FW on Core With CSM on Aggregation in Layer 3

(2) FW and CSM on Aggregation with CSM in Layer 2 and FW in Layer 3

(3) FW and CSM on Aggregation with CSM in One-Armed and FW in Layer 3

(4) FW and CSM on Aggregation with CSM in One-Armed and FW in Layer 2
Secure Internal Segment

Physical Topology

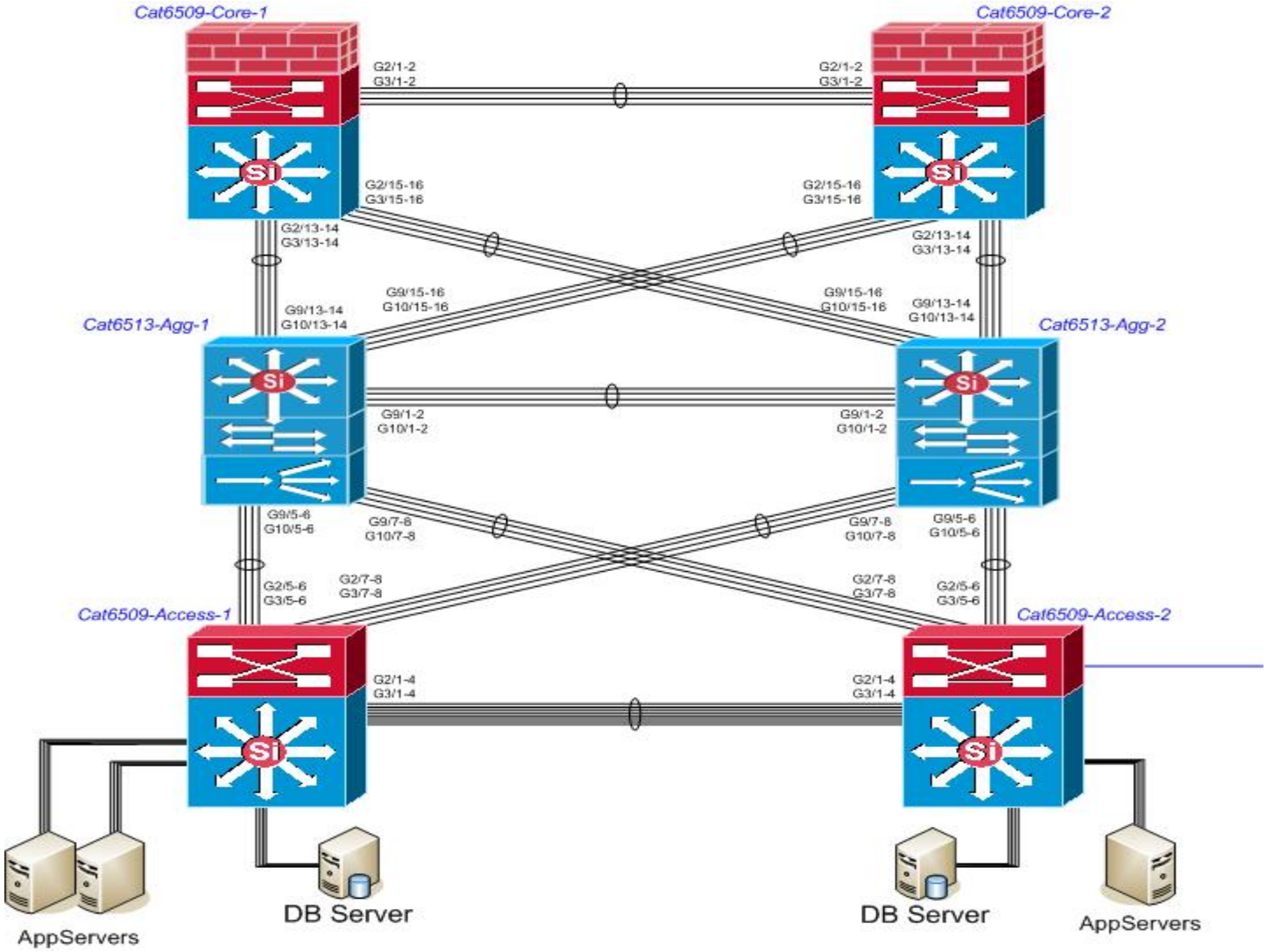

Design (1): Firewall on Core; ACE on Aggregation in Layer 3 Mode

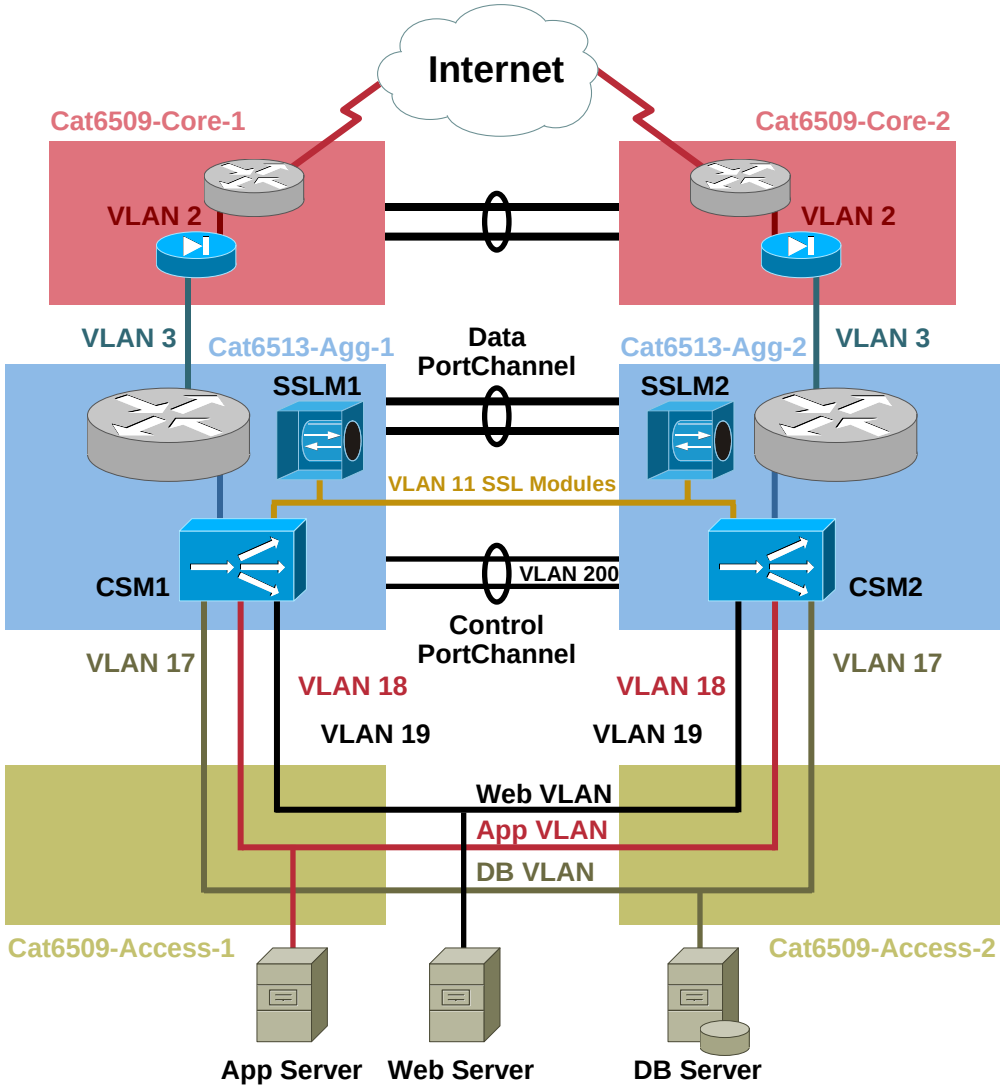

Security Details

- Layer 3 firewall used
- Firewall perimeter at the core
- Aggregation and access are considered trusted zones
- Security permiter not possible between Web/App/DB tiers
- In the aggregation layer, some security using VLAN tags on the CSM is possible

Content Switching Details

- CSM is used in routed design
- Servers default gateway is the CSM alias IP address
- Extra configurations needed for:
  - Direct access to servers
  - Non-load balanced server initiated sessions
- CSM's default gateway is the HSRP group IP on the MSFC
- Since MSFC is directly connected to the CSM, RHI is possible
- All to/from traffic, load balanced/ non-load balanced servers go through the CSM

Design (1): Firewall on Core; CSM on Aggregation in Layer 3 Mode

Configuration Snapshots

```
module ContentSwitchingModule 3
 vlan 16 client
 ip address 10.16.1.12 255.255.255.0
 gateway 10.16.1.1
 alias 10.16.1.11 255.255.255.0
!
 vlan 11 server
 ip address 10.11.1.2 255.255.255.0
 alias 10.11.1.1 255.255.255.0
!
 vlan 17 server
 ip address 10.17.1.2 255.255.255.0
 alias 10.17.1.1 255.255.255.0
!
 vlan 18 server
 ip address 10.18.1.2 255.255.255.0
 alias 10.18.1.1 255.255.255.0
!
 vlan 19 server
 ip address 10.19.1.2 255.255.255.0
 alias 10.19.1.1 255.255.255.0
```

```
MSFC SVI

interface Vlan16
 ip address 10.16.1.2 255.255.255.0
 standby 16 ip 10.16.1.1
 standby 16 priority 150
```

```
 serverfarm ROUTE
 no nat server
 no nat client
 predictor forward
!
 vserver ROUTE
 virtual 0.0.0.0 0.0.0.0 any
 serverfarm ROUTE
 persistent rebalance
 inservice
```

Design (1): Firewall on Core; CSM on Aggregation in Layer 3 Mode: Session Flows

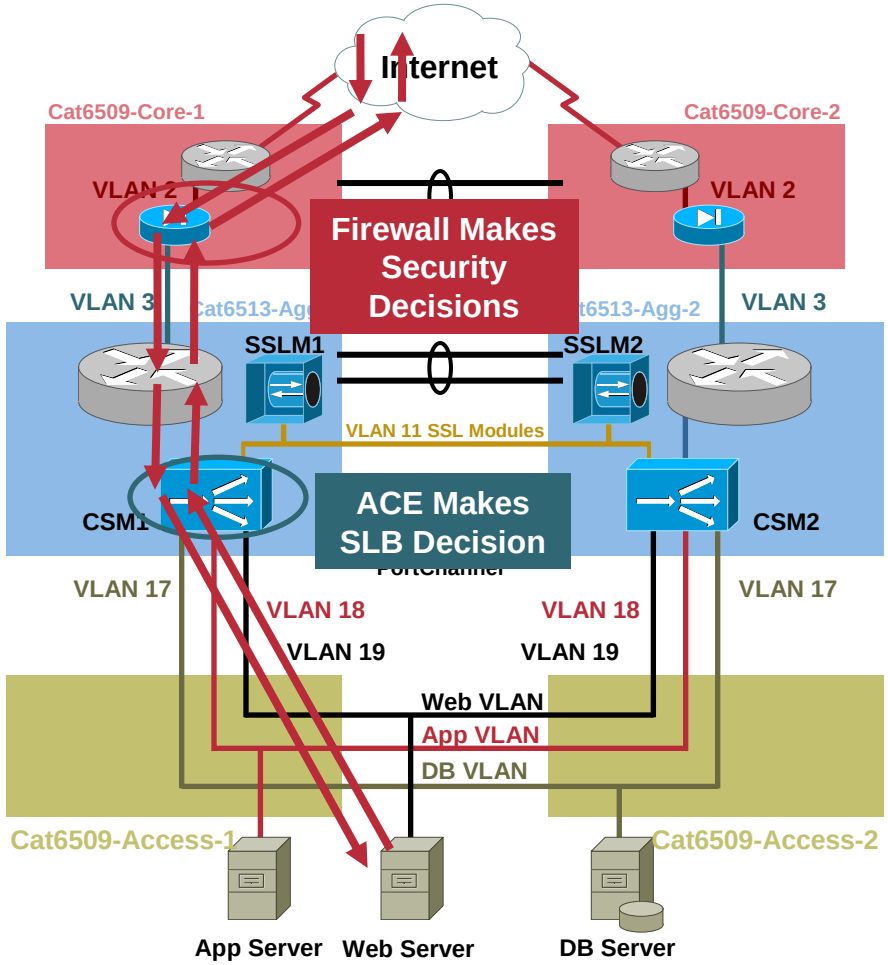

Load Balanced Session Flow

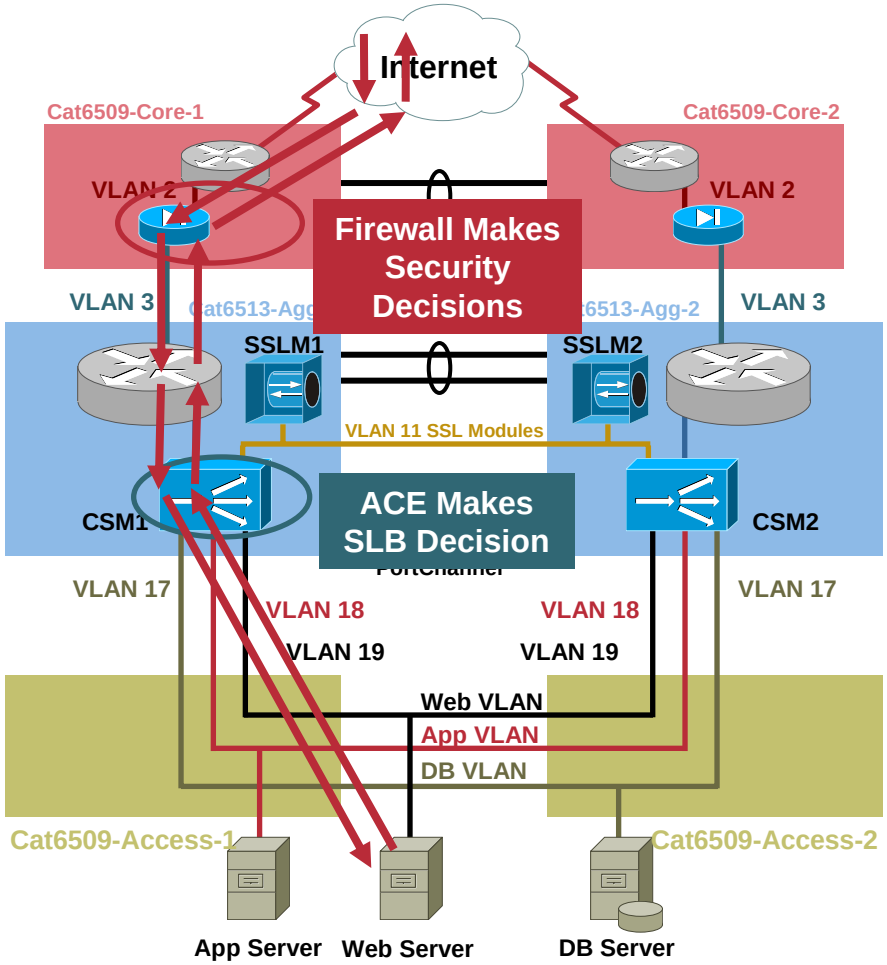

Server Management Session Flow

Design (2): Firewall and CSM on Aggregation; FW in Layer 3 and CSM in Layer 2 Mode

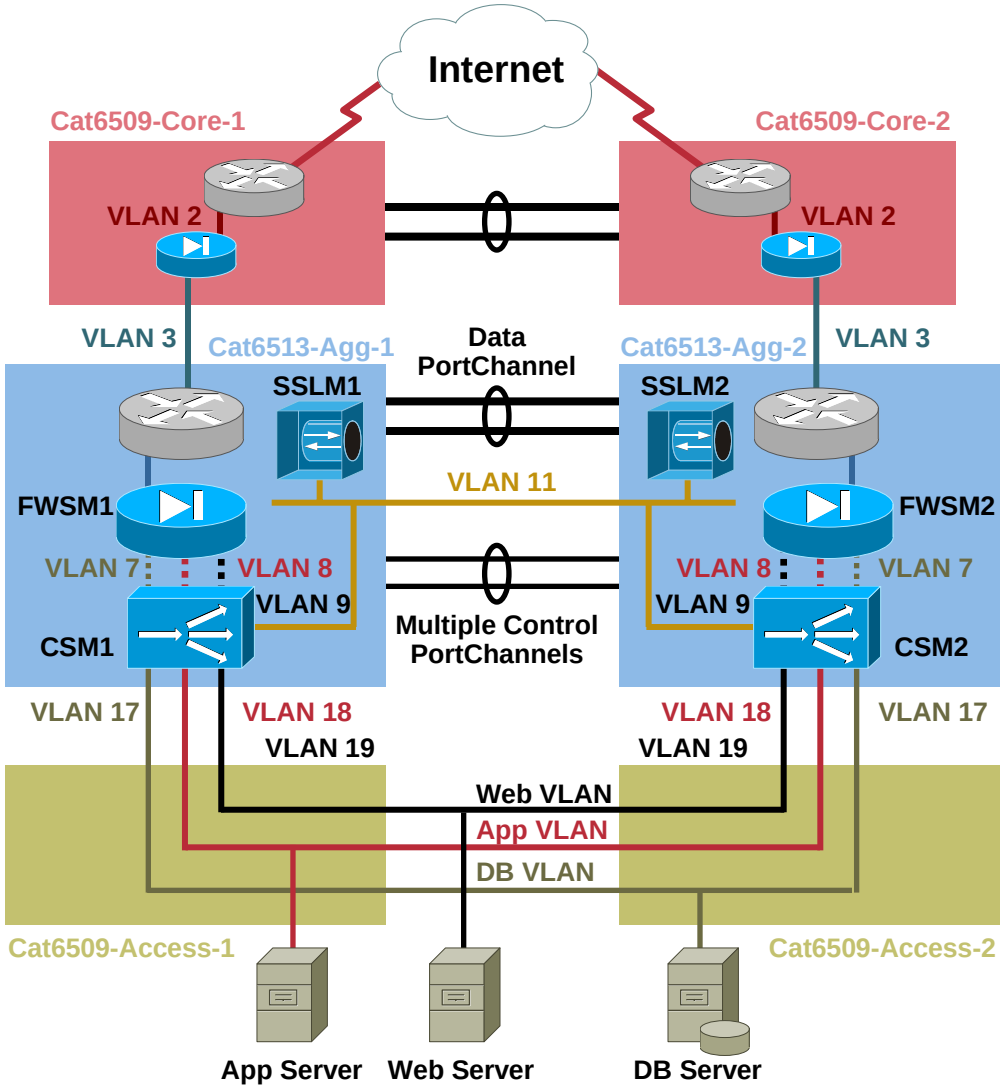

Security Details

- Layer 3 firewall used with single contexts
- Firewall perimeter at the core
- Firewall perimeter is used in the aggregation between Web/App/DB tiers

Content Switching Details

- CSM is used in bridged design with multiple bridged VLAN pairs
- Servers default gateway is the firewall primary IP address
- No extra configurations needed for:
  - Direct access to servers
  - Non-load balanced server initiated sessions
- CSM's default gateway is the firewall primary IP address
- Since MSFC is not directly connected to the CSM, RHI is not possible
- All to/from traffic, load balanced/ non-load balanced servers go through the CSM

Design (2): Firewall and CSM on Aggregation; FW in Layer 3 and CSM in Layer 2 Mode

Configuration Snapshots

```
module ContentSwitchingModule 3
!
 vlan 11 server
 ip address 10.11.1.2 255.255.255.0
 alias 10.11.1.1 255.255.255.0
!
 vlan 7 client
 ip address 10.17.1.11 255.255.255.0
 gateway 10.17.1.1
!
 vlan 17 server
 ip address 10.17.1.11 255.255.255.0
!
 vlan 8 client
 ip address 10.18.1.11 255.255.255.0
 gateway 10.18.1.1
!
 vlan 18 server
 ip address 10.18.1.11 255.255.255.0
!
```

MSFC SVI

```
interface Vlan16
 ip address 10.16.1.2 255.255.255.0
 standby 16 ip 10.16.1.1
 standby 16 priority 150
```

VLANS ON THE FIREWALL

VLAN16 (towards the MSFC)

DMZ VLANs
VLAN7
VLAN8
VLAN9

Design (2): Firewall and CSM on Aggregation; FW in Layer 3 and CSM in Layer 2 Mode

Session Flows

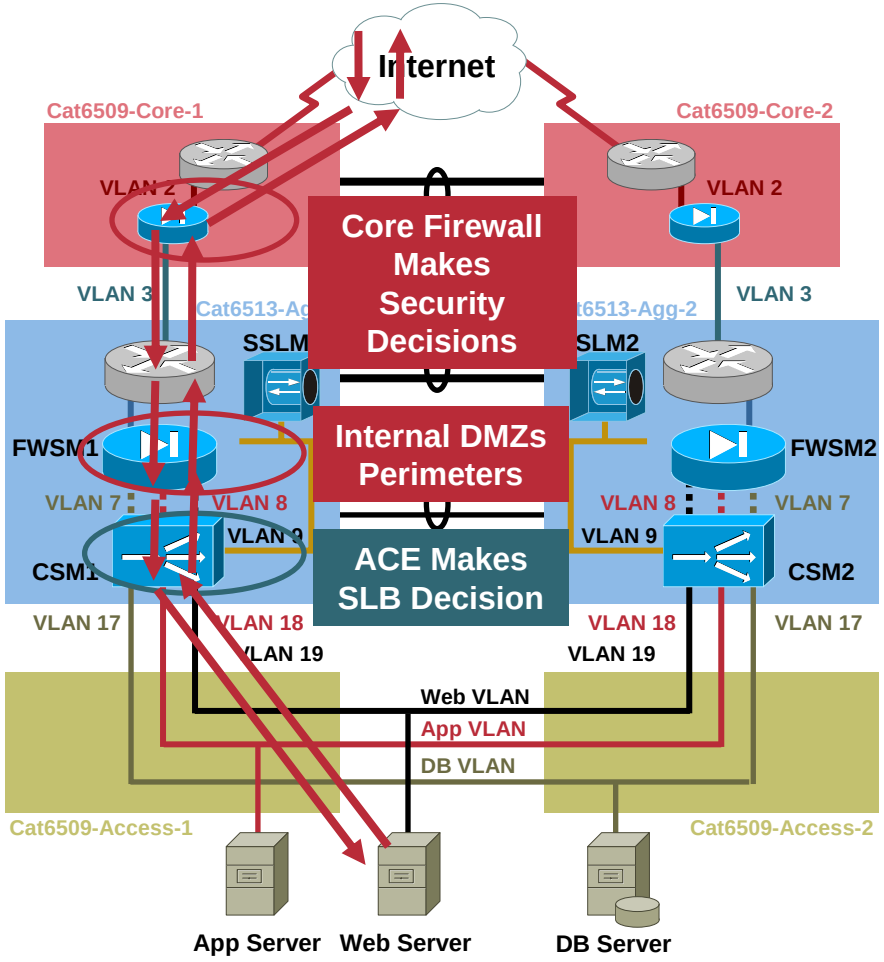

Load Balanced Session Flow

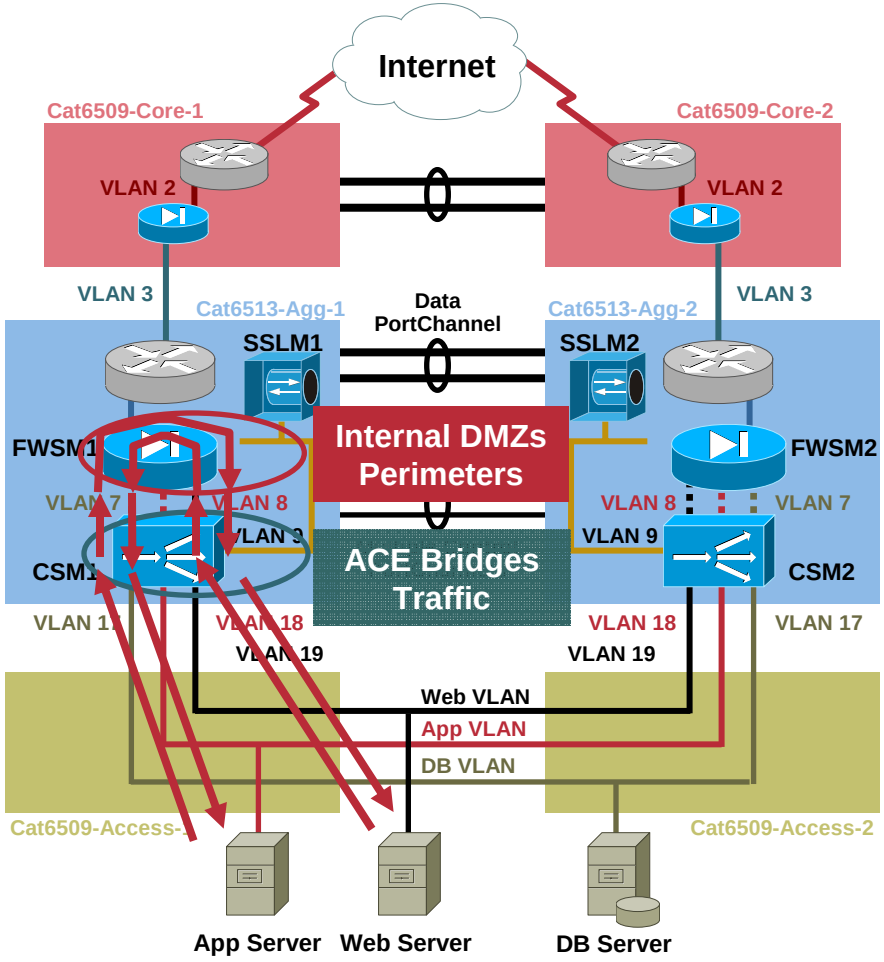

Web Server to App Server Session Flow

Design (3): Firewall and CSM on Aggregation; FW in Layer 3 and CSM in One-Armed Mode

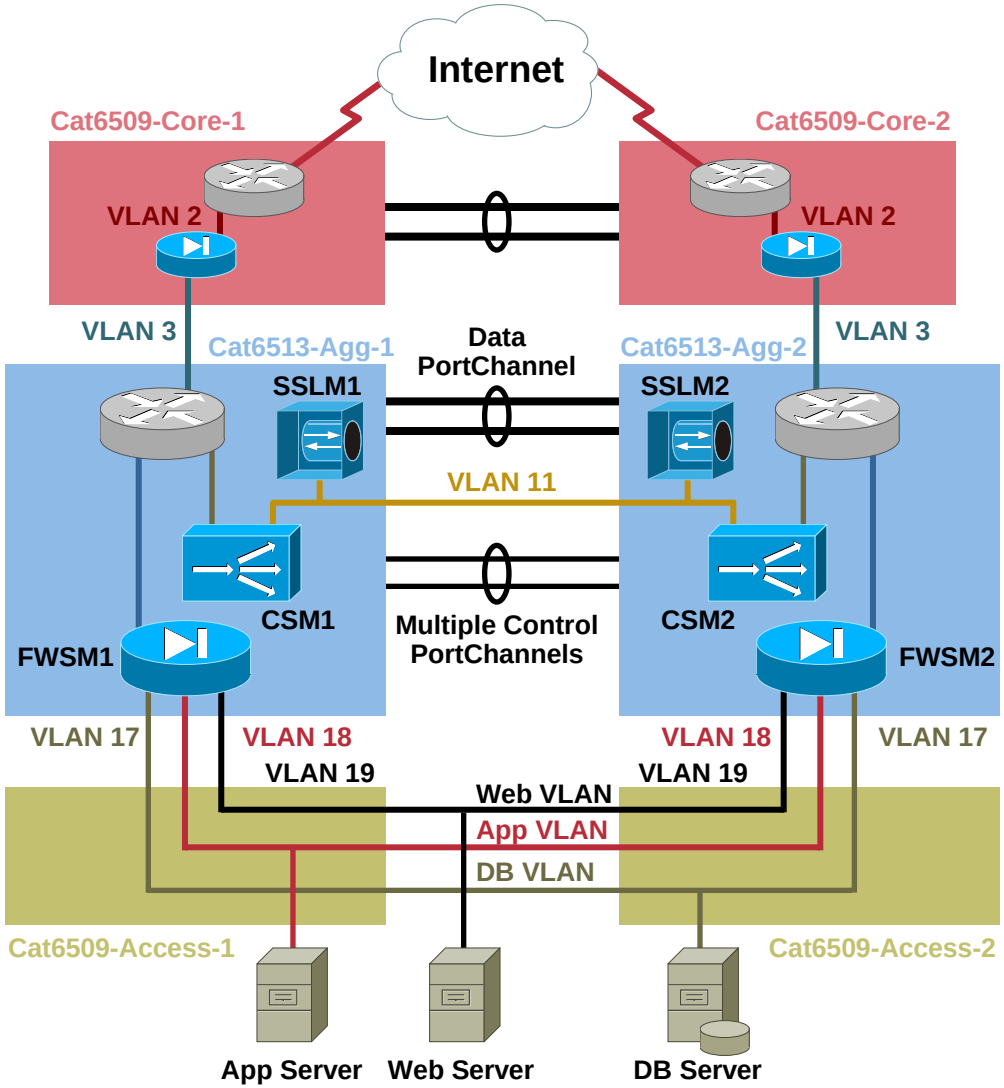

Security Details

- Layer 3 firewall used with single contexts
- Firewall perimeter at the core
- Firewall perimeter is used in the aggregation between Web/App/DB tiers

Content Switching Details

- CSM is used in a one-armed fashion
- Servers default gateway is the firewall primary IP address
- No extra configurations needed for:
  - Direct access to servers
  - Non-load balanced server initiated sessions
- CSM's default gateway is the HSRP group address on the MSFC
- Since MSFC is directly connected to the CSM, RHI is possible
- All non-load balanced traffic to/from servers will bypass the CSM

Design (3): Firewall and CSM on Aggregation; FW in Layer 3 and CSM in One-Armed Mode

```
module ContentSwitchingModule 3
 vlan 15 server
 ip address 10.15.1.12 255.255.255.0
 gateway 10.15.1.1
 alias 10.15.1.11 255.255.255.0
!
 vlan 11 server
 ip address 10.11.1.2 255.255.255.0
 alias 10.11.1.1 255.255.255.0
!
```

```
MSFC SVI
interface Vlan15
 ip address 10.15.1.2 255.255.255.0
 standby 15 ip 10.15.1.1
 standby 15 priority 150
!
interface Vlan16
 ip address 10.16.1.2 255.255.255.0
 standby 16 ip 10.16.1.1
 standby 16 priority 150
```

VLANS ON THE FIREWALL

VLAN16 (towards the MSFC)

DMZ VLANs

VLAN17

VLAN18

VLAN19

Design (3): Firewall and CSM on Aggregation; FW in Layer 3 and CSM in One-Armed Mode

Session Flows (1 of 2)

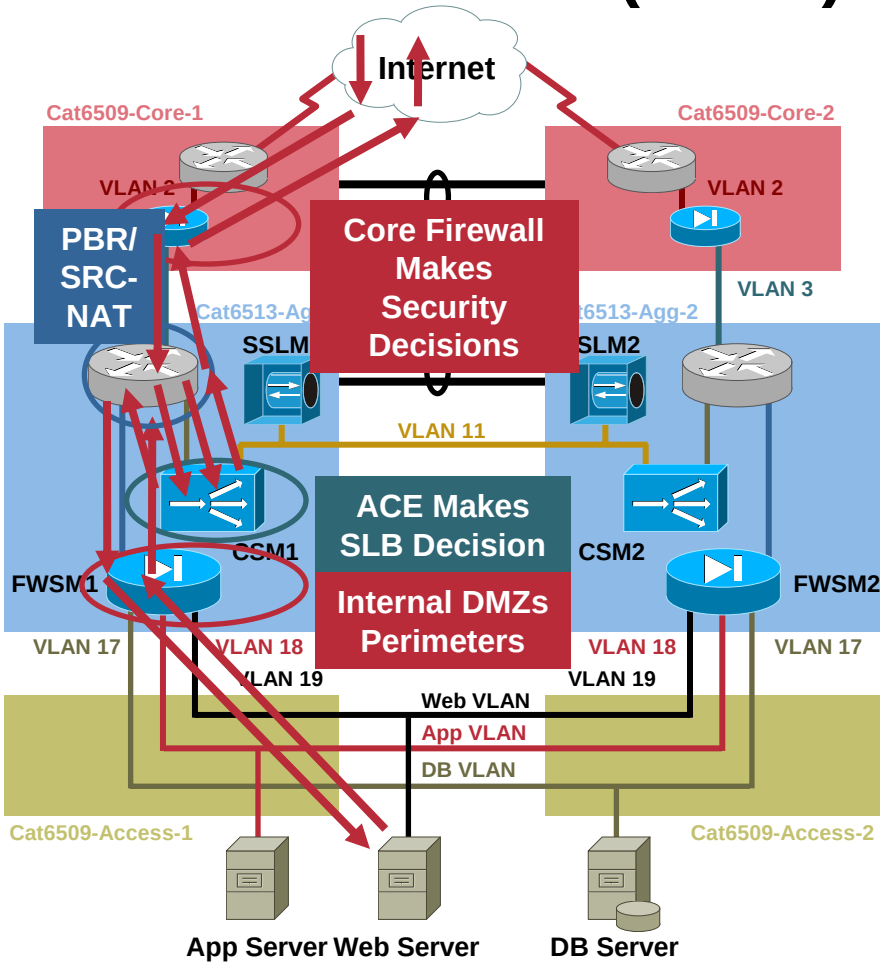

Load Balanced Session Flow

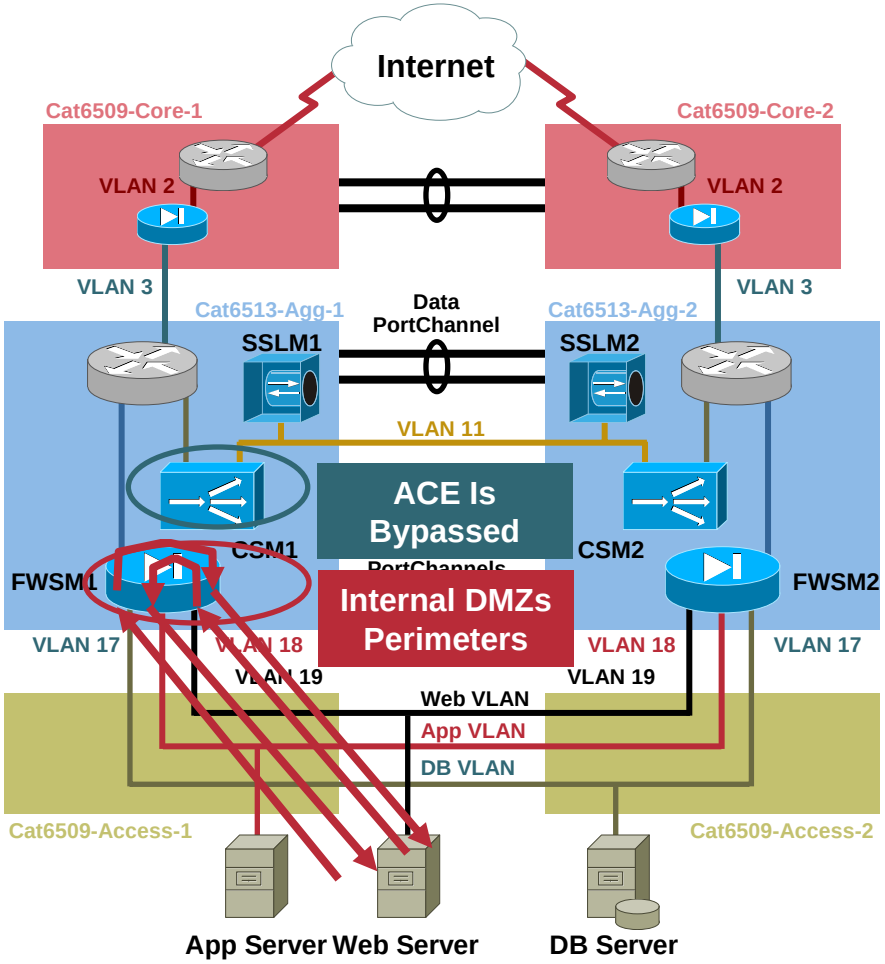

Web Server to App Server Session Flow

Design (3): Firewall and CSM on Aggregation; FW in Layer 3 and CSM in One-Armed Mode

Session Flows (2 of 2)

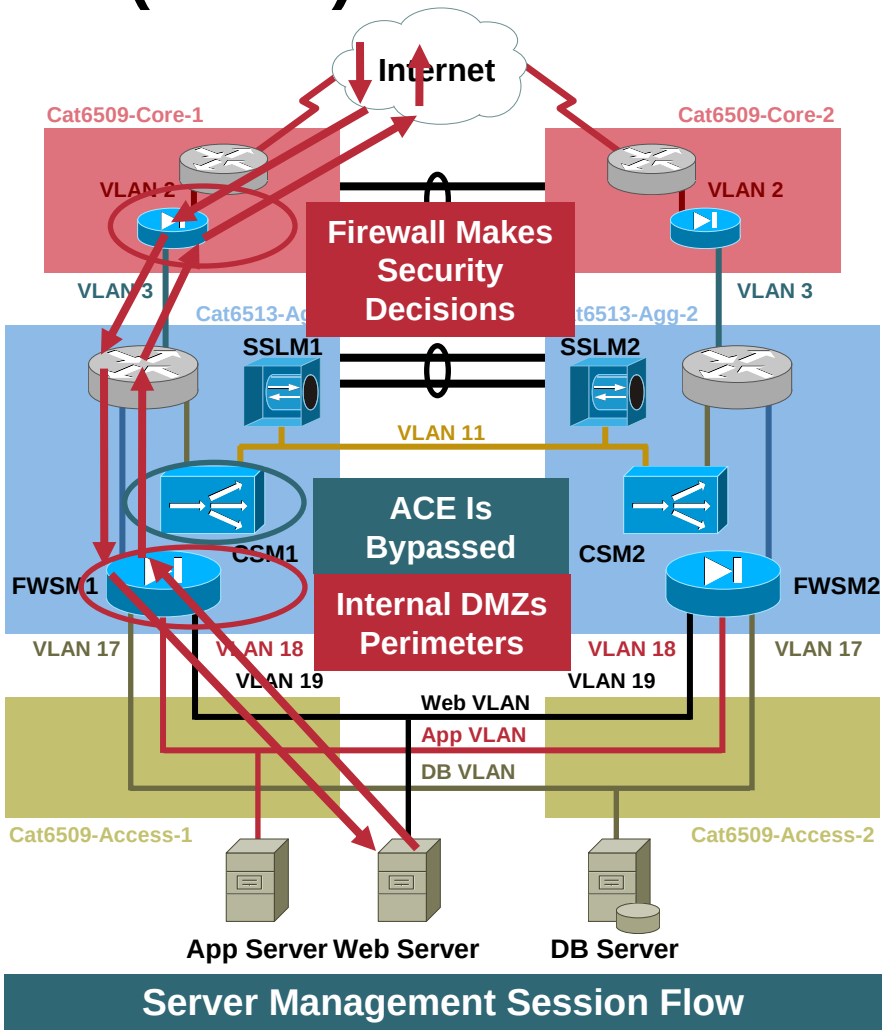

Design (4): Firewall and CSM on Aggregation; FW in Layer 2 and CSM in One-Armed Mode [Secure Internal Segment]

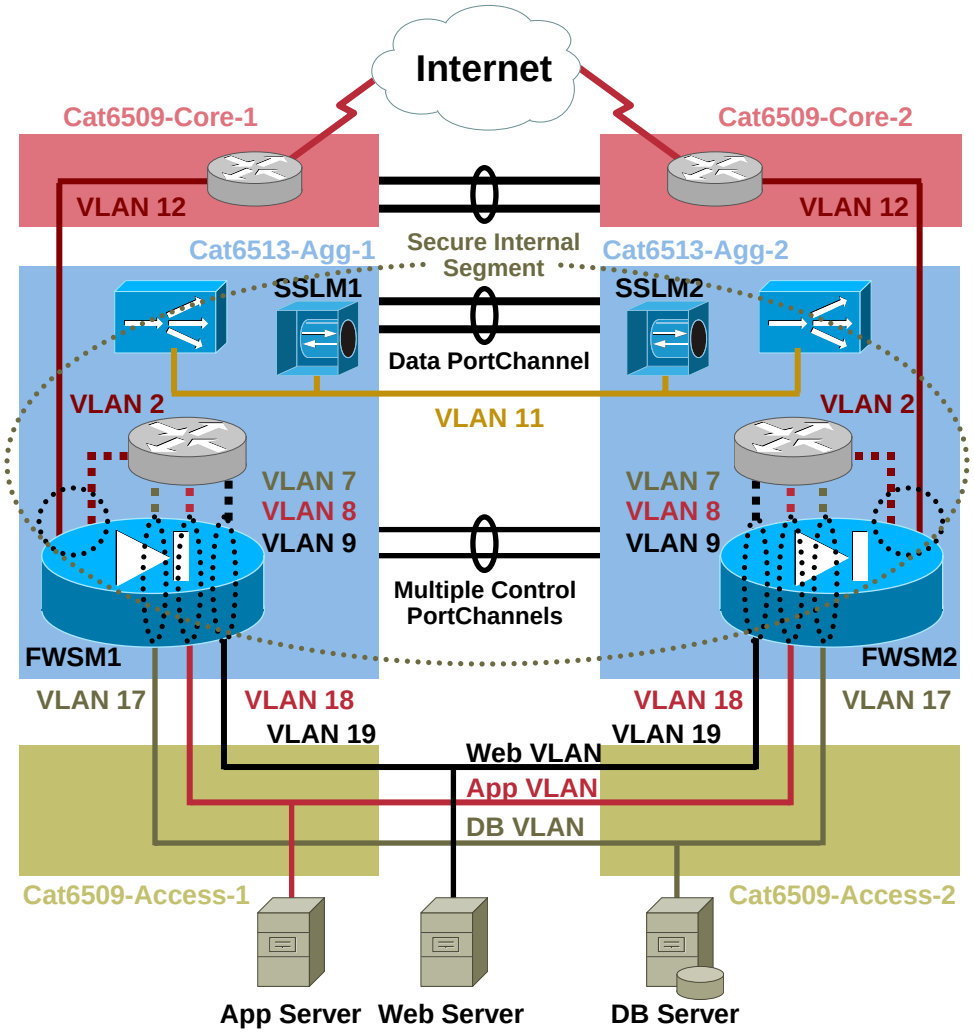

Security Details

- Layer 2 firewall used with multiple contexts
- Firewall perimeter at outside, internal and each DMZ
- Agg MSFC is a secure internal segment with protection from each connected network
- Secure internal segment is protected from malicious activity from each DC network

Content Switching Details

- CSM is used in a one-armed fashion
- Servers default gateway is the HSRP group IP address
- No extra configurations needed for:
  - Direct access to servers
  - Non-load balanced server initiated sessions
- CSM's default gateway is the HSRP group address on the MSFC
- Since MSFC is directly connected to the CSM, RHI is possible
- All non-load balanced traffic to/from servers will bypass the CSM

Design (4): Firewall and CSM on Aggregation; FW in Layer 2 and CSM in One-Armed Mode [Secure Internal Segment]

```
module ContentSwitchingModule 3
 vlan 15 server
 ip address 10.15.1.12 255.255.255.0
 gateway 10.15.1.1
 alias 10.15.1.11 255.255.255.0
!
 vlan 11 server
 ip address 10.11.1.2 255.255.255.0
 alias 10.11.1.1 255.255.255.0
```

```
FIREWALL CONTEXTS

context DB
 allocate-interface vlan7
 allocate-interface vlan17
 config-url disk:/DB.cfg
!
context APP
 allocate-interface vlan8
 allocate-interface vlan18
 config-url disk:/APP.cfg
```

```
context WEB
 allocate-interface vlan9
 allocate-interface vlan19
 config-url disk:/WEB.cfg
```

```
MSFC SVI

interface Vlan15
 ip address 10.15.1.2 255.255.255.0
 standby 15 ip 10.15.1.1
 standby 15 priority 150
!
interface Vlan7
 ip address 10.17.1.2 255.255.255.0
 standby 17 ip 10.17.1.1
 standby 17 priority 150
!
interface Vlan8
 ip address 10.18.1.2 255.255.255.0
 standby 18 ip 10.18.1.1
 standby 18 priority 150
!
interface Vlan9
 ip address 10.19.1.2 255.255.255.0
 standby 19 ip 10.19.1.1
 standby 19 priority 150
```

Design (4): Firewall and CSM on Aggregation; FW in Layer 2 and CSM in One-Armed Mode [Secure Internal Segment]: Session Flows

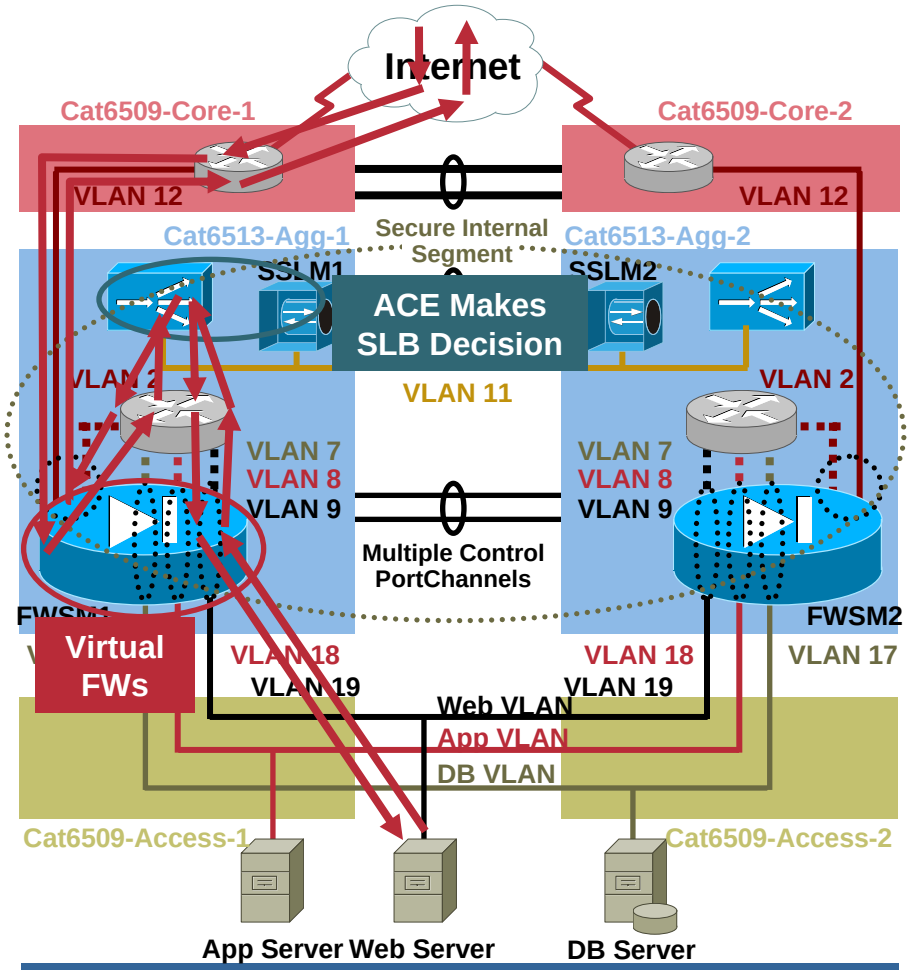

Load Balanced Session Flow

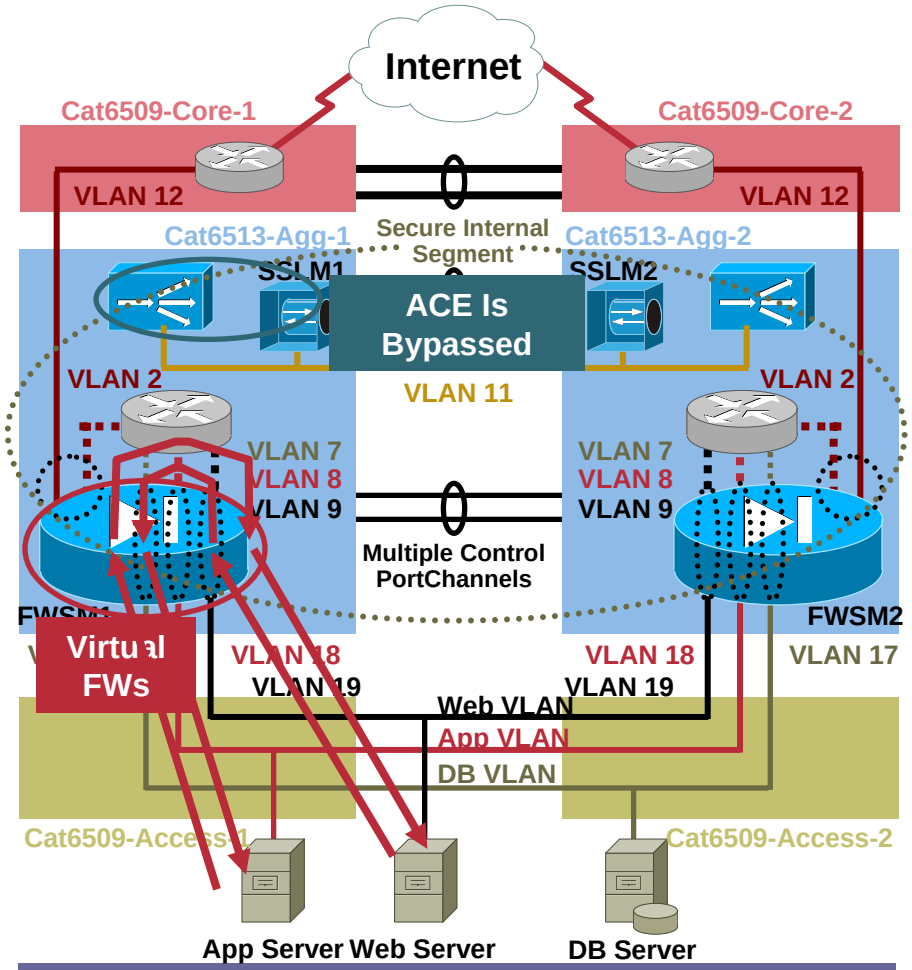

Web Server to App Server Session Flow

Q and A

Recommended Reading

- **Designing Content Switching Solutions: ISBN: 158705213X**

  By Zeeshan Naseh, Haroon Khan